# Saab 9000

## SERVICE MANUAL

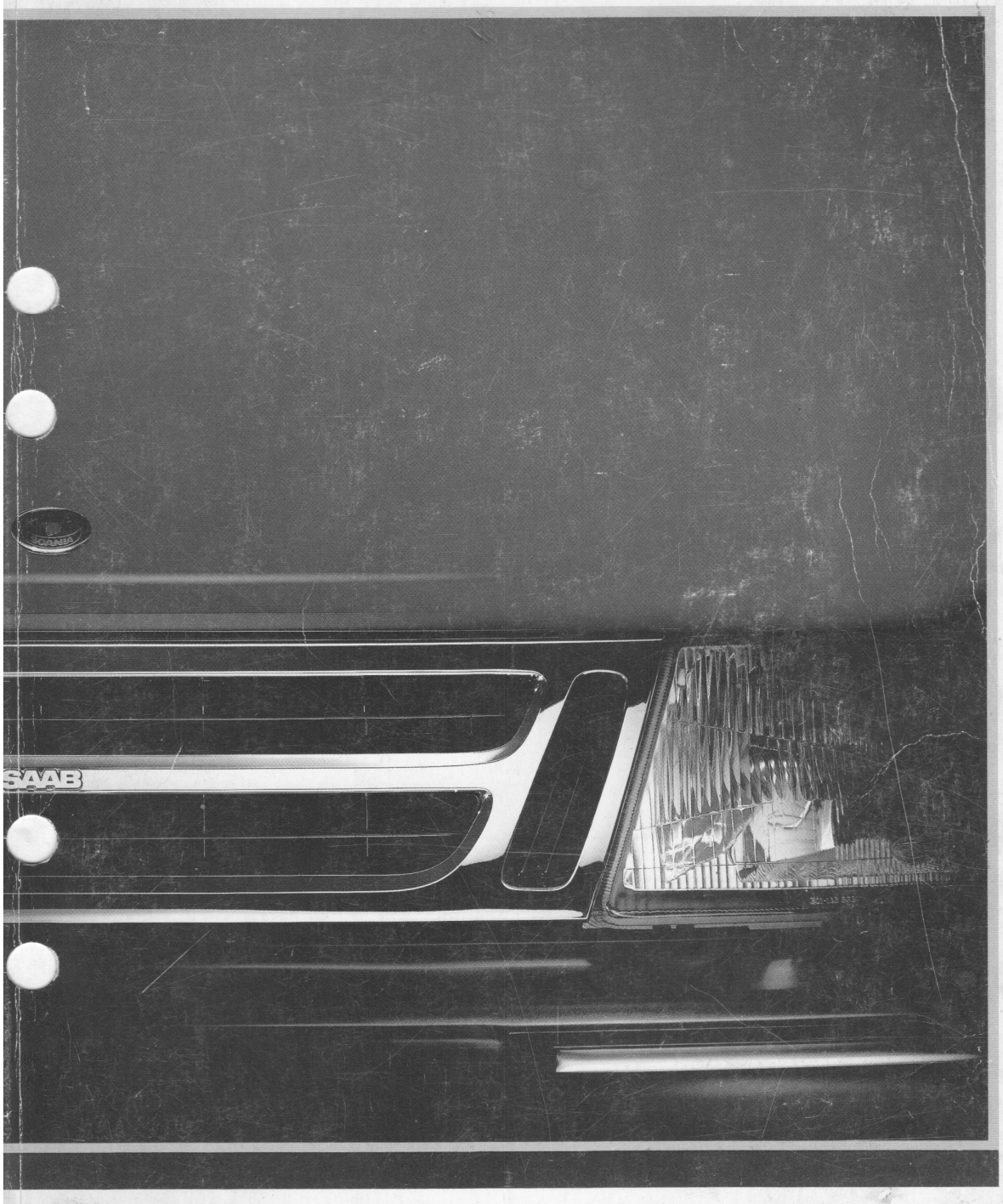


SAAB

# 5:2 Anti-Lock Braking System (ABS Mark IV)

M 1993

# Saab 9000

## SERVICE MANUAL

### 5:2 Anti-lock Braking System (ABS Mark IV)

M 1993


025 Technical data

105 Special tools

500 Technical description

501 ABS control: description of operation

510 Component removal/fitting

520 Bleeding the brake system

530 Changing the brake fluid

590 Fault diagnosis ABS Mark IV

## Units

The basic and derived units used throughout the Service Manual are in accordance with the SI system. (Systéme International d'Unités)

For users not familiar with the SI units, some non-Continental units are given in brackets after the respective SI unit.

The following symbols and abbreviations are used:

| SI unit | Equivalent unit and symbol |
|---|---|
| Millimeter (mm) | inch (in) |
| Kilograme (kg) | pound (lb) |
| Newton (N) | pound-force (lbf) |
| Newtonmeter (Nm) | foot pound (ft lb) |
| Atmosphere (bar) | pound-force per square inch (lbf/in$^2$) (Also abbreviated: psi) |
| Liter (l) | US liquid quart (liq qt) (Also abbreviated: qts) US gallon (USgal) |
| °Celcius (°C) | °Fahrenheit (°F) |

**Conversion factors**

| | |
|---|---|
| 1 in = 25.4 mm | 1 mm = 0.039 in |
| 1 lb = 0.45 kg | 1 kg = 2.20 lb |
| 1 lbf = 4.45 N | 1 N = 0.23 lbf |
| 1 lbf ft = 1.36 Nm | 1 Nm = 0.74 lbf ft |
| 1 psi = 0.07 bar | 1 bar = 14.5 lbf/in$^2$ |
| 1 US liq qt = 0.83 UKqt | 1 l = 1.05 liq qt |
| | 1 USgal = 0.83 UKgal |
| °F = °C x 9/5 + 32 | °C = (°F - 32) x 5/9 |

## Market codes

The codes refer to market specifications

| | | | |
|---|---|---|---|
| AT | Austria | GB | Great Britain |
| AU | Australia | GR | Greece |
| BE | Belgium | IS | Iceland |
| CA | Canada | IT | Italy |
| CH | Switzerland | JP | Japan |
| DE | Germany | ME | Middle East |
| DK | Denmark | NL | Netherlands |
| ES | Spain | NO | Norway |
| EU | Europe | SE | Sweden |
| FE | Far East | US | USA |
| FI | Finland | UC | US California |
| FR | France | | |



Production: Service Support, Saab Automobile AB, Trollhättan, Sweden

# Technical data

## Hydraulic unit

| | | |
|---|---|---|
| Make | | ATE |
| Working voltage | Volts | 10-14 |
| Working temperature | °C | -30 to +80 |
| Pressures: Brake circuits | bar | 100-300 (depending on pedal pressure) |

## Brake fluid reservoir

| | | |
|---|---|---|
| Reservoir capacity | litres | 0.36 |
| Brake fluid specification | | DOT 4 |
| Number of chambers | | 5 |
| No. 1 and no. 2 chamber | | Primary circuit |
| No. 3 and no. 4 chamber | | Secondary circuit |
| No. 5 chamber | | Hydraulic clutch |
| Filter flow capacity | litres/min (liq qt/min) | 0.5 for both brake circuits |

## Motor-pump unit

| | | |
|---|---|---|
| Type | | Eccentric piston pump |
| Inlet side pressure | bar | 0.1-1.0 |
| Delivery side pressure | bar | up to 300 |
| Power demand | Watts | 180 (at 160 bar) |
| Maximum running time | | 2 min at a time followed by 10-min pause (pump must not be run dry) |

## Solenoid valves

| | | |
|---|---|---|
| Maximum working pressure | bar | 180 + 40 |
| Power rating at 12 V | Watts | 25 |
| Resistance | | |
| Inlet valve | Ohms | 7 ± 10% |
| Outlet valve | Ohms | 3.7 ± 10% |

## ECU

| | | |
|---|---|---|
| Working voltage range | Volts | 7-18 |
| Power rating | Watts | 40 |
| Working temperature range | °C | -40 to +80 |

## Wheel sensors

| | | |
|---|---|---|
| Working voltage range | Volts AC | 0.15-0.70 |
| Resistance | Ohms | 800-1400 |
| No. of teeth | | 46 |
| Wheel sensor - sensor wheel clearance | mm | 0.65 |

## Tightening torques

| | | |
|---|---|---|
| Hydraulic unit | Nm | 25 ± 4 |

# Special tools

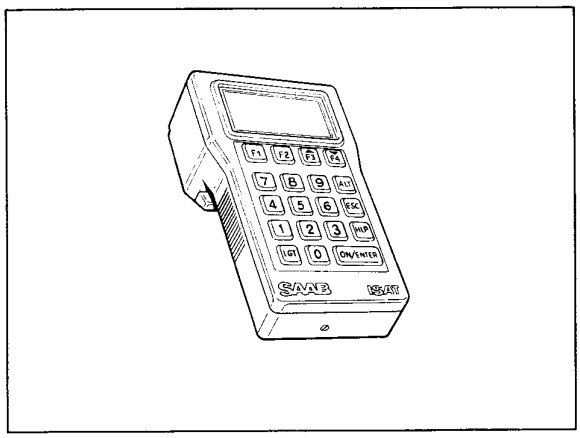


*86 10 651 ISAT*

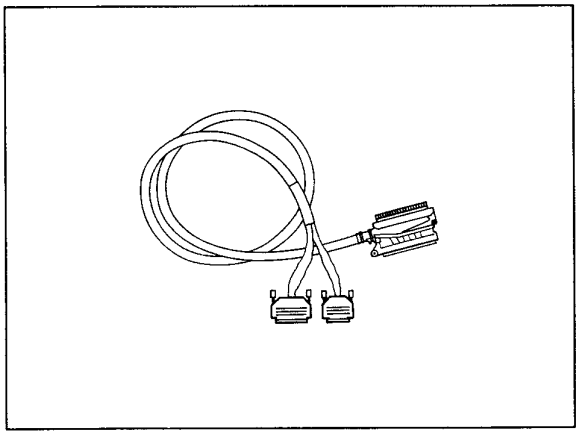

*86 11 030 Breakout box lead*

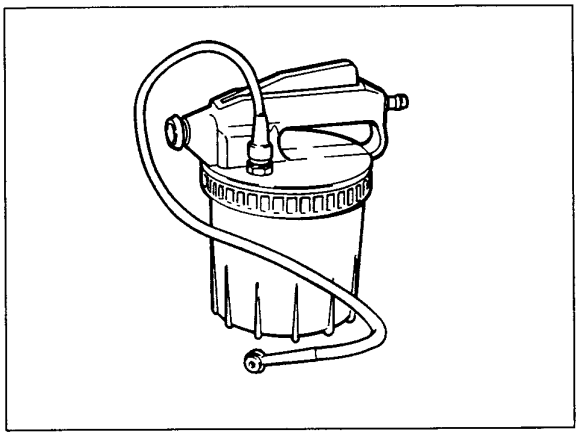

*88 19 096 Brake bleeder unit*

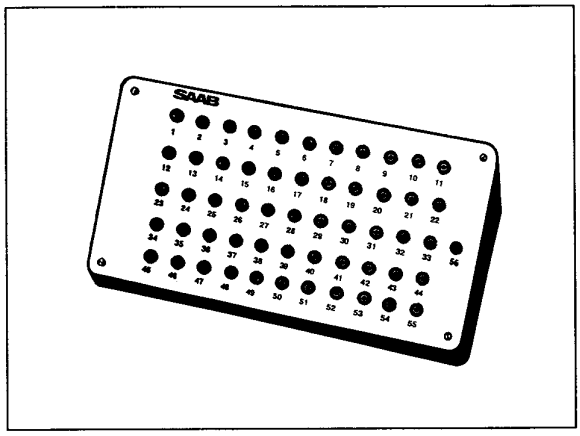


*86 11 006 Breakout box*

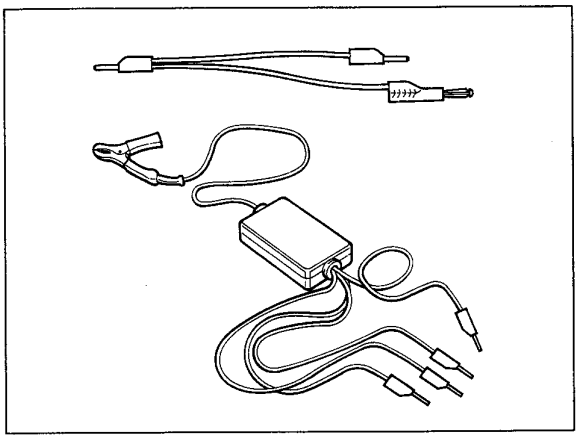

*86 11 212 Jumper leads*

# Technical description

**General** . . . . . 500-1
**Principles of operation**. . . . . 500-5
**Components**. . . . . 500-10

## General

ABS brakes (Anti-lock Braking System) have been developed to provide optimum braking, with no loss of directional stability, under widely varying conditions. The stopping distance of a car is influenced by a variety of factors, including weather conditions, road surface, traffic conditions and the brake pressure applied.

The ABS system provides modern braking systems with a control function that enables the maximum braking effect to be applied in critical situations, regardless of the road conditions.

The braking system is divided into two separate diagonal brake circuits. One circuit comprises the right-hand front wheel and left-hand rear wheel (primary circuit), while the other comprises the left-hand front wheel and right-hand rear wheel (secondary circuit).
This means that if one of the brake circuits fails, e.g. as a result of a leak, 50%of the total braking effect is always retained.

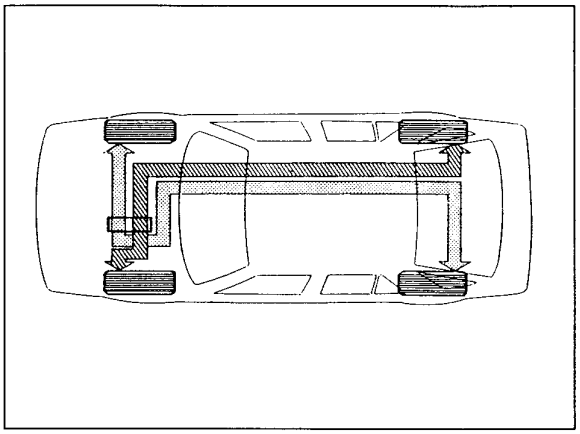

Primary circuit

Secondary circuit

The main advantages of the ABS system are:

- Reduced tyre wear.
- No loss of directional stability on braking.
- Steering control retained even during heavy braking.
- Shortest possible stopping distance.
- Normal power-assisted braking if the ABS is inoperative.

To understand how the ABS system provides optimum braking without any loss of directional stability, we need to examine the forces acting on a wheel during braking.

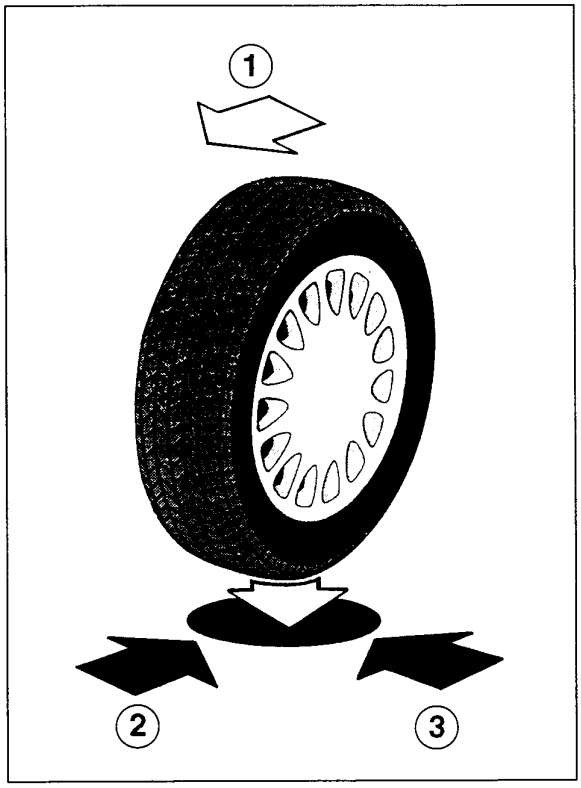


1 Direction of travel
2 Braking force
3 Lateral force

*All the forces taken up by the tyre are either lateral forces or braking forces*

On the diagram, curve (I) shows the relationship between braking force (expressed as a coefficient) and tyre slip (expressed as a percentage).

The braking force is equivalent to the coefficient of adhesion, i.e. the friction between the tyre and the road surface. Each application of a braking force gives rise to a certain degree of slip, ranging from 0%when the wheel is rolling freely to 100%when the wheel is locked.

When the brake is first applied, the braking force increases sharply, but the degree of slip only gradually, up to a certain limit. Beyond that point, the braking force decreases with increasing slip.

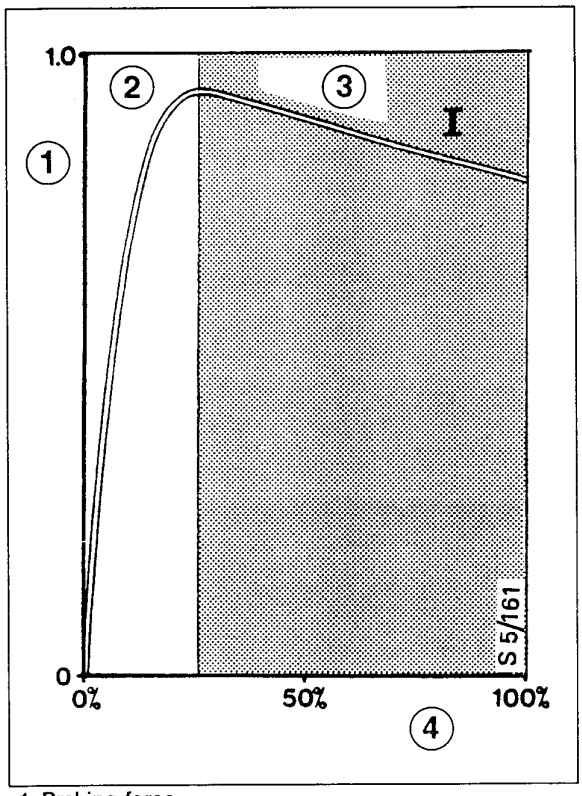


1 Braking force
2 Stable braking zone
3 Unstable braking zone
4 Slip

The maximum braking force (coefficient of adhesion) is reached at a point known as the limit of optimum slip.

The section of the curve between 0%slip and the limit of optimum slip is known as the stable braking zone. The section of curve between the limit of optimum slip and 100%slip is known as the unstable braking zone, as stable braking cannot be achieved within this zone. This is because the wheel quickly becomes locked after the limit of optimum slip has been reached, unless the braking force is immediately reduced. Slip also occurs when lateral force is applied on the tire (e.g. on cornering).

Curve II on the diagram shows lateral force as a function of slip. As can be seen, lateral force falls away sharply with increasing slip. At 100%slip, i.e. when the wheels have locked up, no lateral force remains for steering and the driver will no longer be able to control the vehicle.

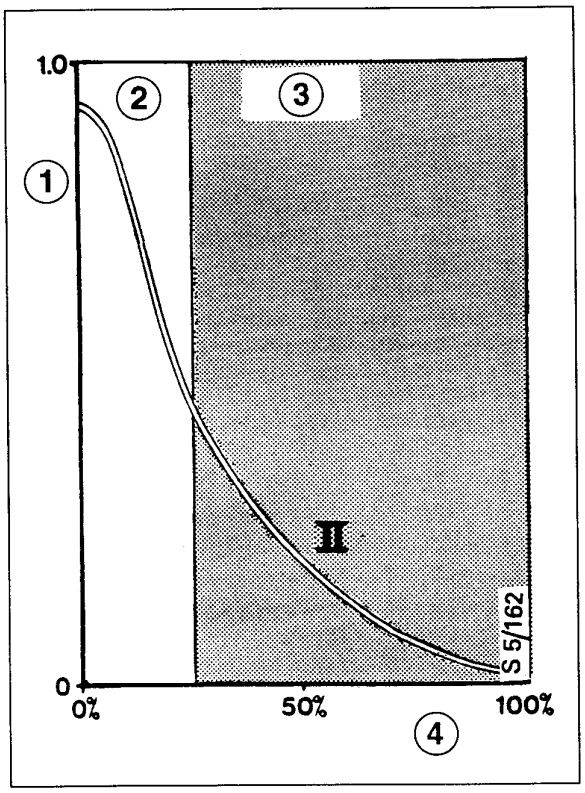


1 Lateral force
2 Stable braking zone
3 Unstable braking zone
4 Slip

Both curves are shown on this next chart, which also shows the range within which the ABS system is operative. During braking, the system allows the braking force to increase to a point just before the limit of optimum slip and then prevents it from increasing further. The system modulates the hydraulic pressure to keep the braking force as close as possible to the optimum value (the limit of optimum slip) regardless of the pressure applied to the brake pedal.

Because the ABS system prevents the degree of slip from exceeding the limit of optimum slip, the car never enters the unstable zone. At the same time, some lateral force is preserved to ensure that steering control can be retained (curve II).

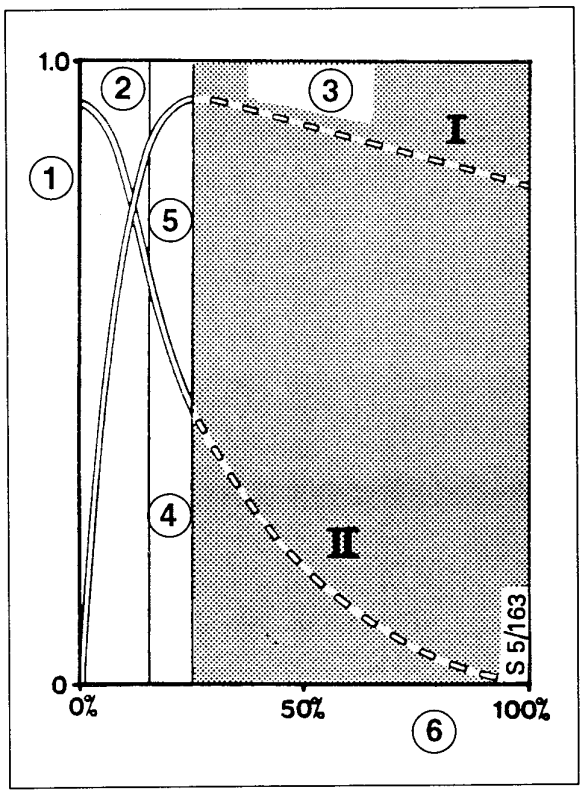


1 Braking/lateral force
2 Stable braking zone
3 Unstable braking zone
4 ABS operating range
5 Limit of optimum slip
6 Slip

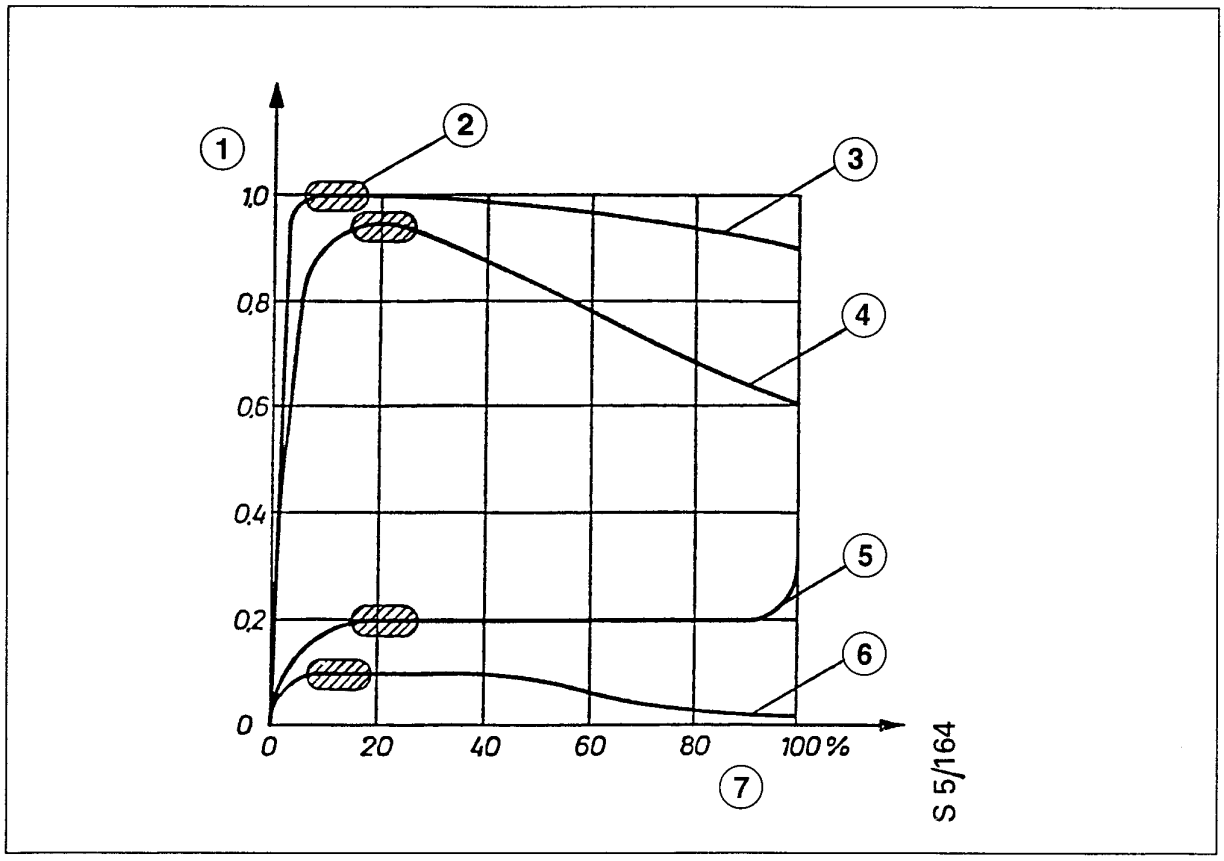


*Graph showing coefficient of adhesion as a function of tyre slip (degree of wheel lock-up) for different road surfaces*

1 Braking force (coefficient of adhesion)
2 Limit of optimum slip
3 Dry road
4 Wet road
5 Snow-covered road
6 Icy road
7 Slip (degree of wheel lock-up)

The relationship between braking force and slip is influenced by a variety of factors including the road surface and the tyre type, tread pattern and pressures. Variations in these factors will affect the braking force and stopping distance in curves I and II but not the principle of operation.

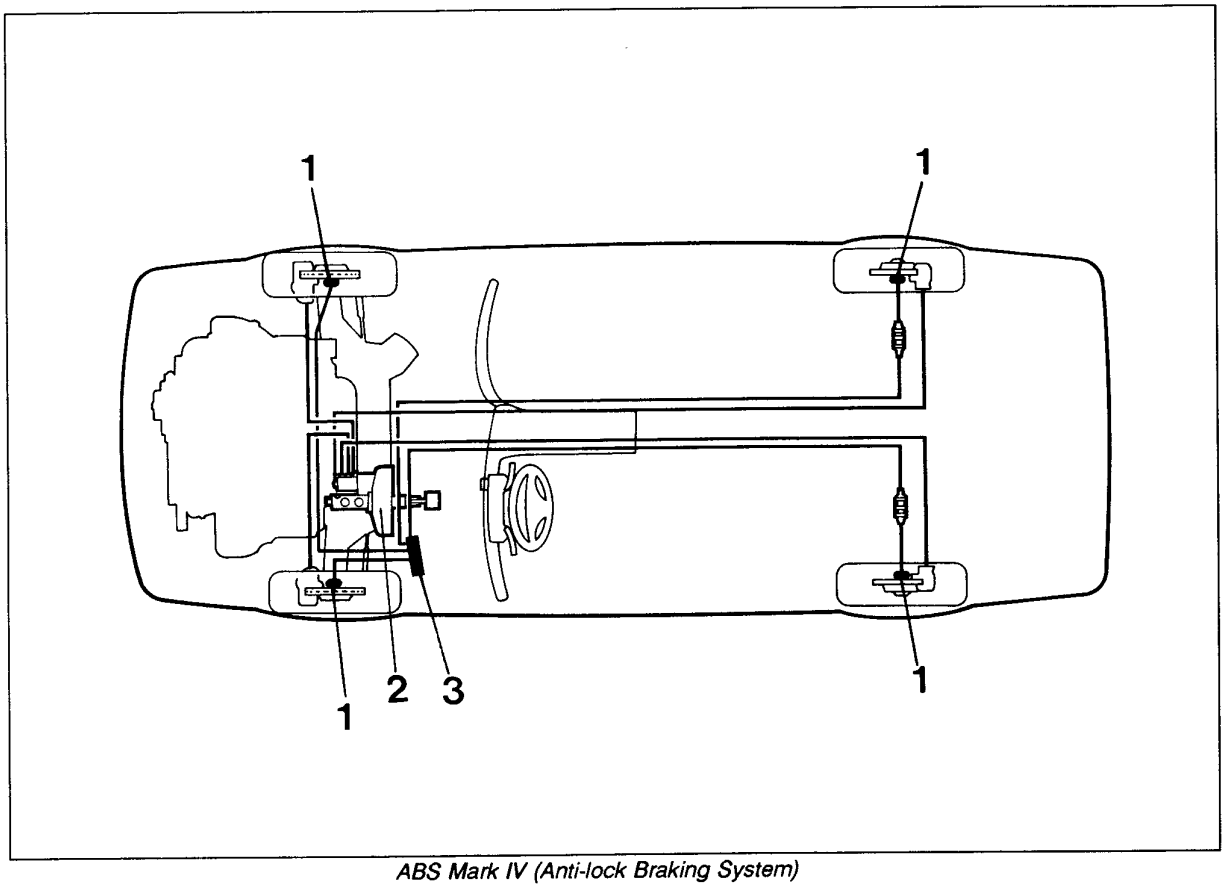


*ABS Mark IV (Anti-lock Braking System)*

1 Wheel sensors
2 Hydraulic unit
3 ECU

## Principles of operation

The ABS system on the Saab 9000 has three principal components:

- A set of four wheel sensors
- Hydraulic unit (including valve block assembly)
- Electronic control unit (ECU)

The ABS Mark IV system is a dual-circuit, four-port braking system.

The ABS Mark IV system is fitted to all model year 1993 and later Saab 9000 models except manual turbo models with the Traction Control System. These cars are equipped as before with the ABS Mark II system.

Signals from the four wheel sensors are sent to the ECU, which continuously monitors the speed, acceleration and deceleration of the wheels, the road speed and tyre slip. If a wheel is about to lock up, the ECU sends signals to the solenoid valves for the wheel concerned, thereby modulating the pressure in the brake circuit for the wheel to provide optimum braking effect and friction between tyre and road.

## Hydraulic unit

The hydraulic unit consists of a valve block, master cylinder, pump and motor in one unit. The hydraulic unit is secured in a vacuum-operated servo (brake pressure booster). The brake fluid reservoir is separate from the hydraulic unit.

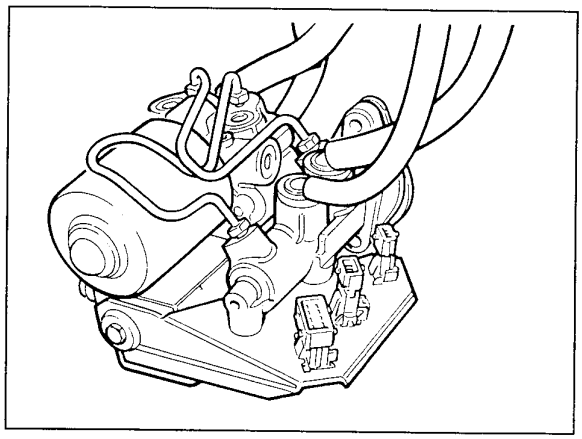

## ECU

The ECU processes the signals from the wheel sensors and, on detecting any lock-up tendency in one or more of the wheels, sends signals to the solenoid valves in the valve block. The pump starts and stops as required (the warning lamp lights up if faults develop in the ABS control). The ECU is located in the engine compartment on the side of the battery tray.

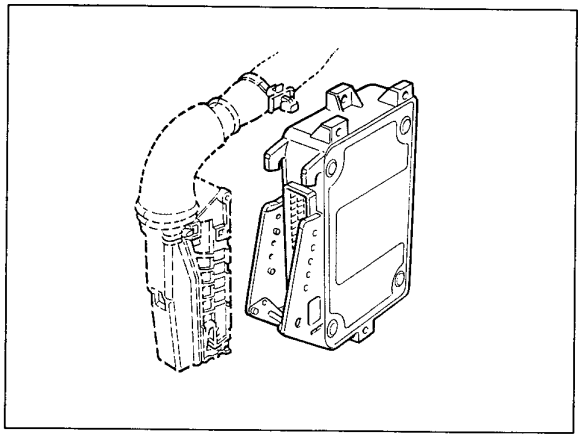

## Brake warning and ABS (Anti-Lock) warning lights

The brake warning light will come on if the level in the fluid reservoir falls below the MIN mark.

The ABS warning light will also come on:

- in the event of a malfunction in the ECU
- in the event of a break in circuit continuity
- in the event of weak signals being received from the wheel sensors
  The ABS is always inoperative when the ABS warning light is on, and the car will then have ordinary power-assisted braking without ABS.

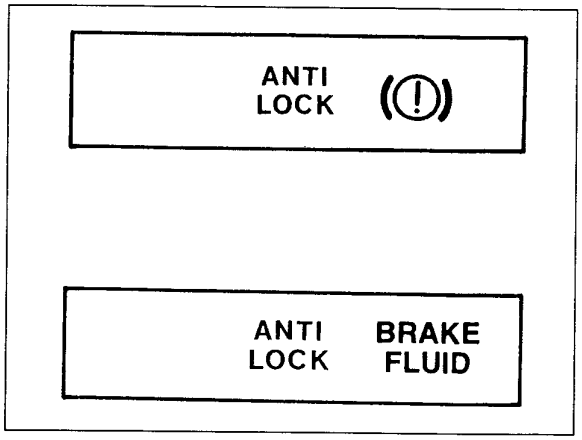

## Front wheel sensors and sensor wheels

The front wheel sensors are mounted radially relative to the trigger weel and operate on the same principle as a generator. Each time a tooth on the rotating sensor wheel passes the sensor, it distorts a magnetic field, causing a signal to be sent to the ECU, which processes the signals to produce the control information it requires, such as wheel speed, retardation and slip.

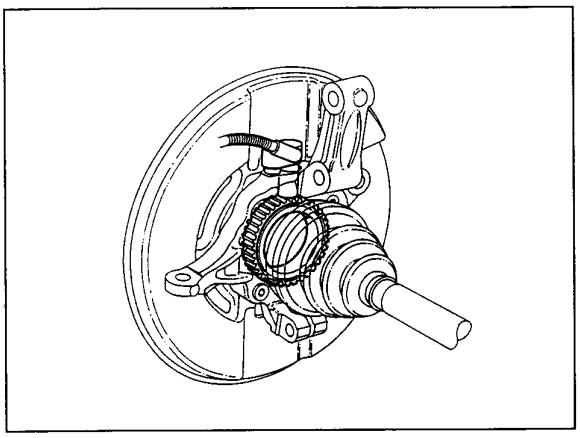

## Rear wheel sensors and sensor wheels

The rear wheel sensors are mounted axially relative to the trigger wheel: the trigger wheels are therefore of a different design to those for the front wheels, although they operate in exactly the same way.

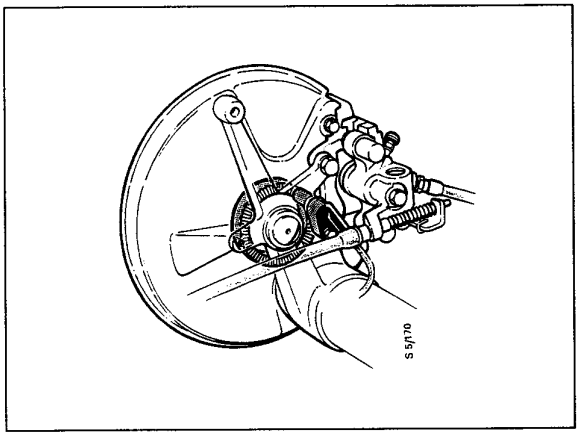


## Valve block

The valve block, which is incorporated in the hydraulic unit, modulates the pressure to the brake calipers when the ABS system is operative. The valve block contains eight solenoid valves: four inlet valves and four outlet valves. Each brake circuit has one inlet and one outlet valve per wheel.

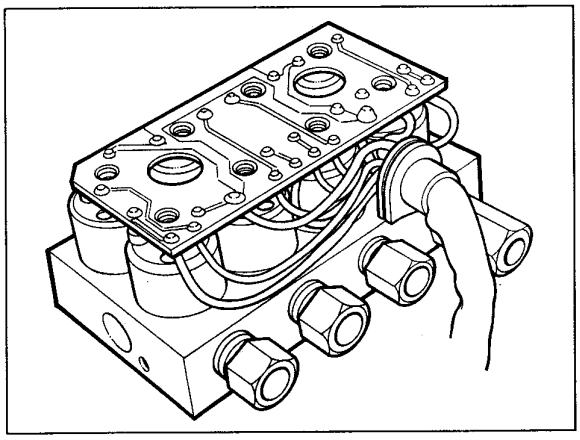

## Overview of operating principles

The ABS Mark IV is based on a vacuum brake servo unit with a flange-mounted tandem master cylinder.

- The central component of the ABS system is the hydraulic unit incorporating the brake servo unit and master cylinder.
- The brakes in the primary circuit (right-hand front wheel and left-hand rear wheel) are activated by the primary piston in the master cylinder.
- The brakes in the secondary circuit (left-hand front wheel and right-hand rear wheel) are activated by the secondary piston in the master cylinder.
- The ABS system is supervised by an electronic control unit (ECU) that detects any tendency for a wheel to lock up during braking.
- A sensor at each wheel continuously senses the speed of rotation of the wheel.
- An a.c. voltage, the frequency of which is proportional to wheel speed, is generated in the sensor. These signals are transmitted continuously in the form of an a.c. voltage sinusoidal wave to the ECU, which processes the signals from the four sensors and computes a value known as the reference speed. The individual signals from each sensor (individual wheel rpm) are then compared with this reference speed. In the event of a tendency being detected for any of the wheels to lock up, the speed indicated by the signal from the sensor for that wheel will differ noticeably from the reference speed.
- The hydraulic pressure in the individual brake circuits is modulated by the solenoid valves in the valve block, which in turn are controlled by signals from the ECU.
- Up to 12 brake-pressure modulation cycles are possible per second and wheel.

## Safety overview

The logic system controlling the solenoid valves in the ABS system is such that the valves will assume their rest (de- energized) positions under no-voltage conditions. ABS system will cease to operate the moment the ECU senses any departure from normal operating conditions; for instance:

- open circuits in the valve block
- weak signals from the wheel sensors, break in continuity in any electrical circuit
- malfunctions in the ECU. Any of these events will cause the ABS warning light to come on. If the ABS system should become inoperative for any reason, all the solenoid valves will be de-energized and the braking system will operate in the same way as a conventional system.

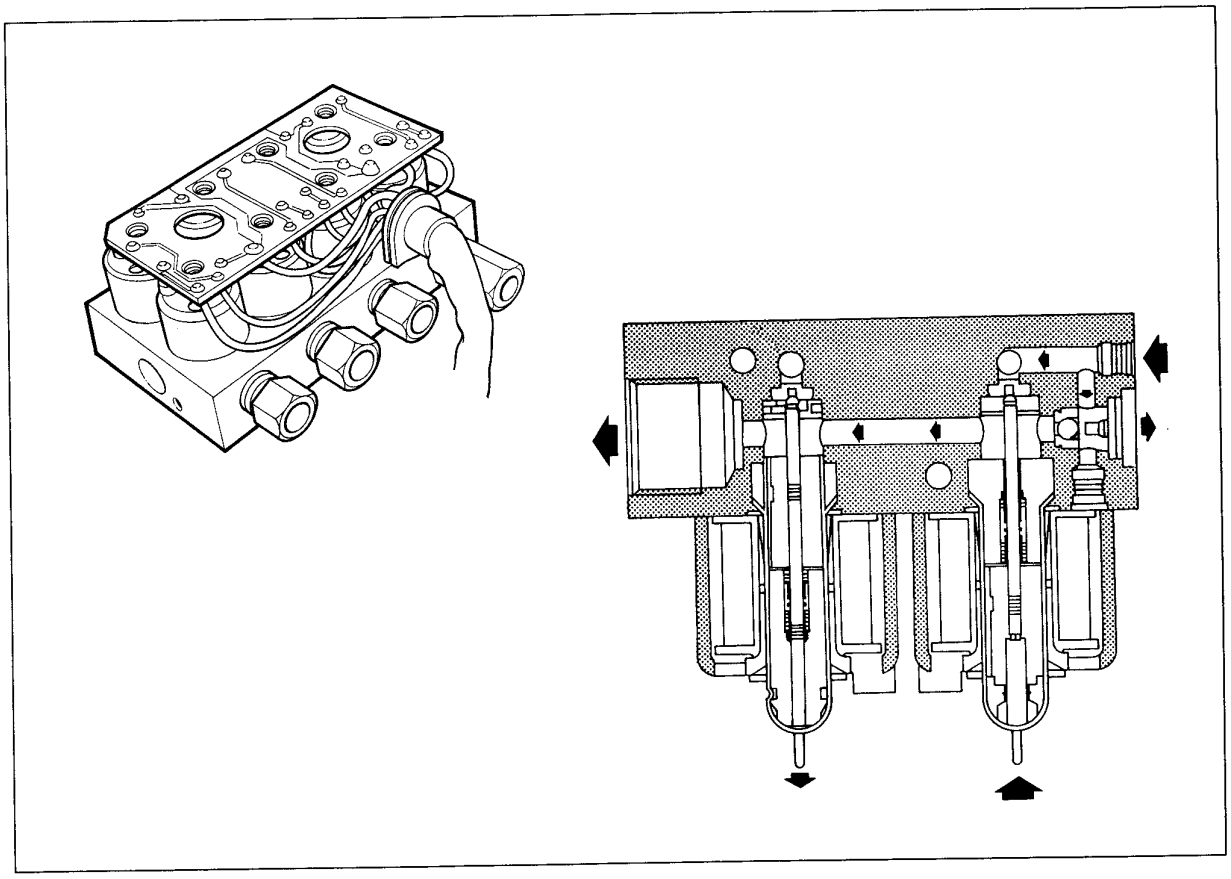

## Components

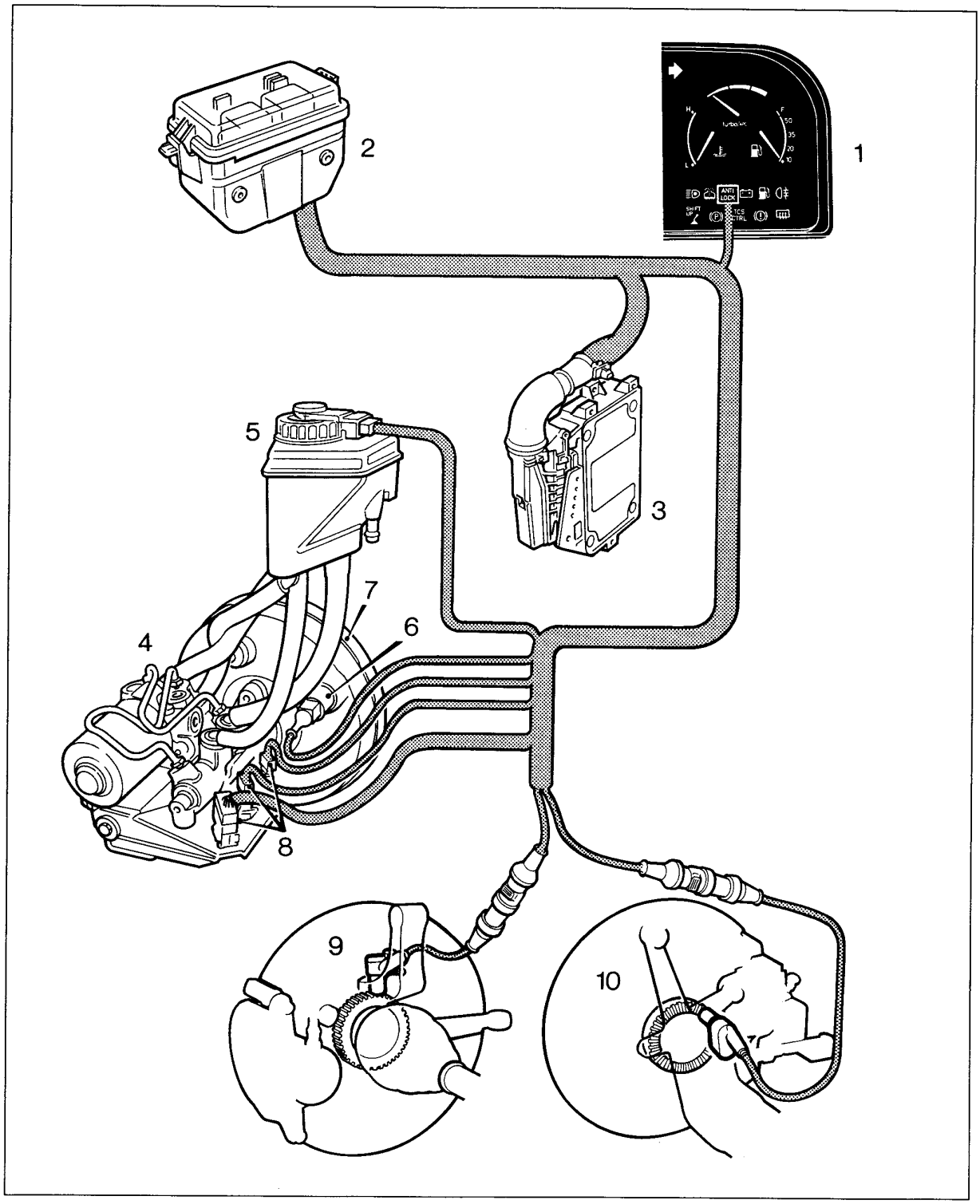


1 ABS warning lights
2 ABS relay box
3 ECU
4 Hydraulic unit
5 Brake fluid reservoir
6 Travel sensor
7 Vacuum-operated servo
8 ABS connectors
9 Wheel sensor, front wheel
10 Wheel sensor, back wheel

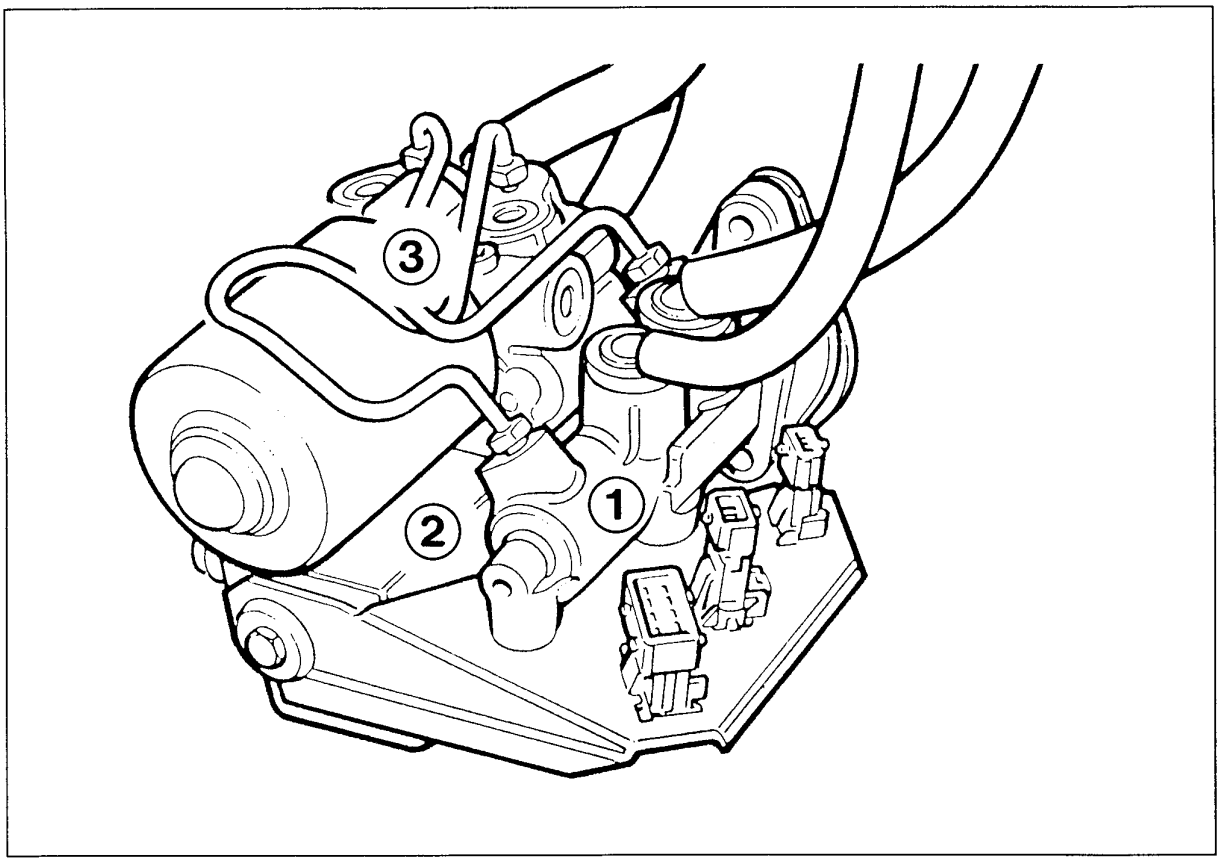


## Hydraulic unit

The following components are incorporated in the hydraulic unit:

- Master cylinder①. Operates on the same principle as a conventional brake master cylinder with central valves.
- Valve block②. Regulates the brake pressure to the wheel brakes during ABS-modulated braking.
- Hydraulic pump with electric motor and speed sensor③.

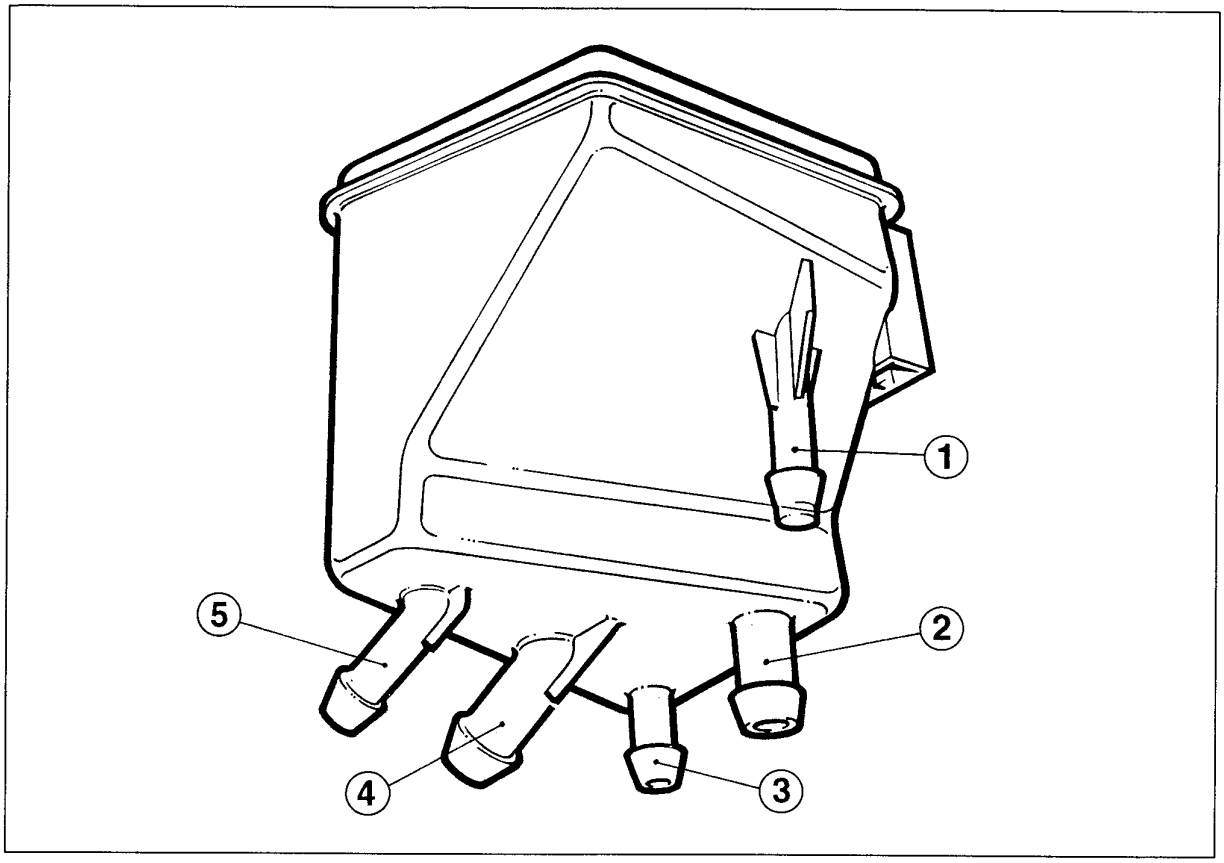


1 To clutch
2 To master cylinder, primary circuit
3 To master cylinder, secondary circuit
4 To pump, primary circuit
5 To pump, secondary circuit

## Brake fluid reservoir

There are five chambers inside the reservoir:

- one chamber for the clutch (manual cars only). On cars with automatic transmission this chamber is plugged.
- two chambers for the primary circuit. One for the master cylinder and one to supply the pump.
- two chambers for the secondary circuit. One for the master cylinder and one to supply the pump. A safety function is incorporated in the design of the chambers. In the event of a leak in one of the circuits, e.g. the primary circuit, sufficient brake fluid will always remain for the other circuit (the secondary circuit) and the full braking effect will be maintained on the diagonal system of the secondary circuit, i.e. the left-hand front wheel and right-hand rear wheel. It will thus still be possible to apply the brakes to two wheels.

The reservoir holds 0.36 litre, but the fluid level must be kept between the MAX and MIN marks on the side of the reservoir. The reservoir is mounted on the bulkhead alongside the ABS main fuse box and is connected to the hydraulic unit by four hoses.
ABS return flow takes place through the master cylinder inlet hose. The reservoir incorporates a fluid level indicator. If the fluid level drops below the MIN mark, the brake warning light comes on. The ABS system will not cut out if the level drops further. The ABS warning light only comes on if faults develop.
If the primary chamber for the master cylinder is drained e.g. as a result of a leak, brake fluid remains in the primary chamber for the hydraulic pump. This means that there is braking effect in the primary circuit if the ABS is activated or position seven is reached on the travel sensor, see pages 500-16 and 17. This is due to the fact that the pump is started up in these two situations.

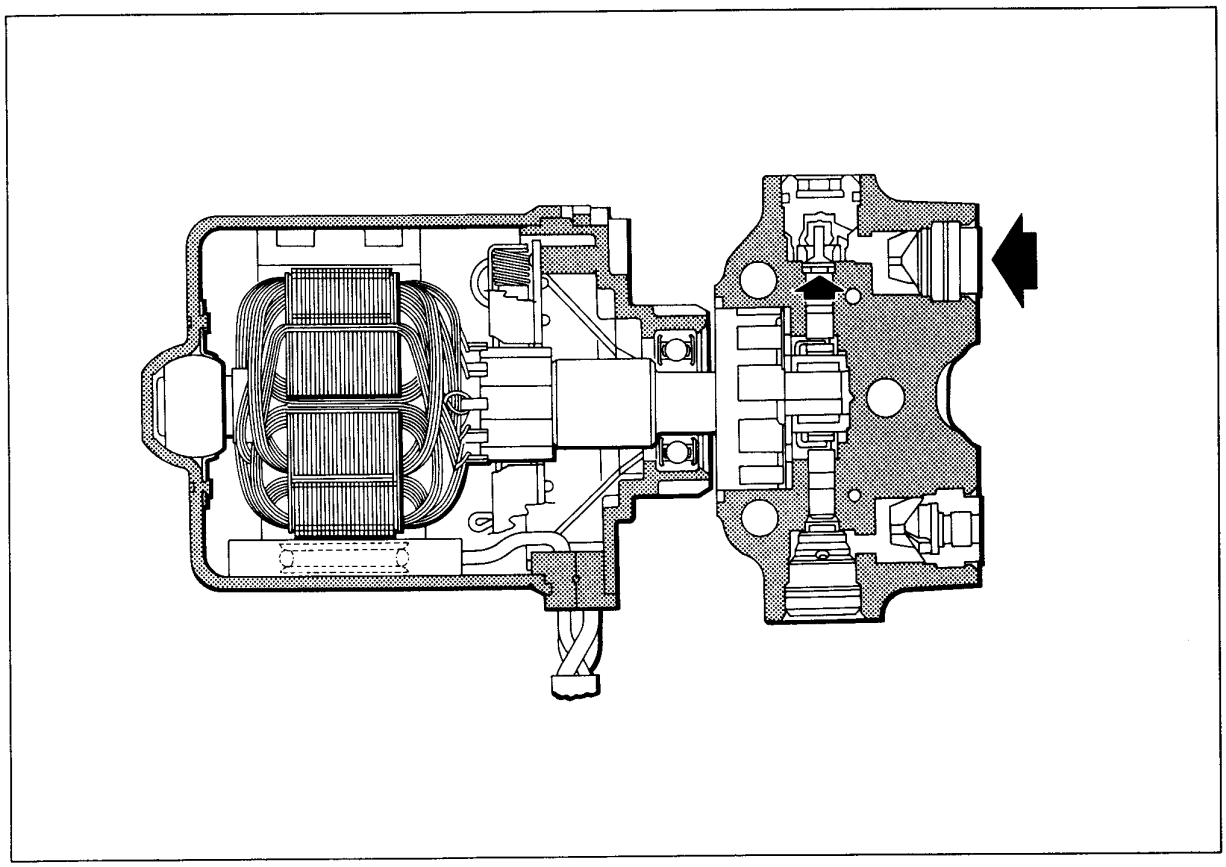

## Pump inlet hose

The hose from the reservoir to the pump is connected to the pump by means of a plastic elbow.

## Electric motor

The electric motor which drives the pump is a d.c. motor with a built-in speed sensor so that the ECU can receive information to the effect that the pump motor is running.
The motor can be replaced only as a complete unit with the pump and valve block.

## Hydraulic pump

The pump unit delivers the necessary extra volume of fluid under ABS control to the brake circuits.
The pressure on the additional brake fluid flow is determined by the brake pressure in the master cylinder, which in turn is proportional to the pedal force applied.
The pressure during normal braking modulation is around 80- 100 bar. The pressure almost never exceeds 100 bar. The electric motor and pump have capacity to spare so that they can always produce sufficient volume and pressure in all ABS braking situations.
The hydraulic pump can be replaced only as a complete unit with the motor and valve block.

## Vacuum-operated servo

The servo unit reinforces the driver's pedal effort when the brakes are applied. The reinforcement of the force applied which is achieved through the servo unit is obtained from the vacuum in the engine intake manifold, and amounts to around 4:1. The servo unit is connected to the intake manifold by a hose.
The servo can produce an increase in pressure of up to 80 bar.

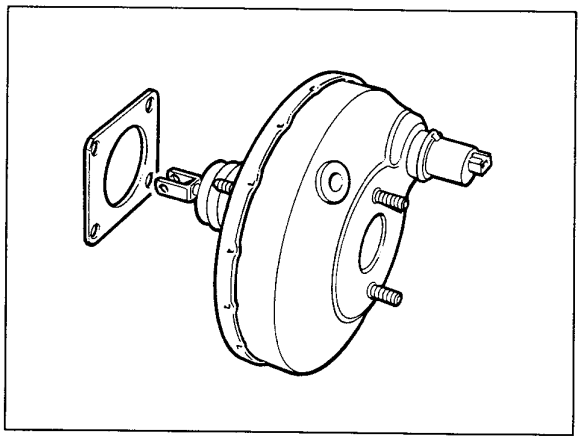

## Brakes off

In the rest position (brakes off), the air passage (4) is closed and the vacuum chamber (8) is connected to the working chamber (6) via the open cross over valve (3). Equal vacuum excists on both sides of the diaphragm (1) in the brakes off position.

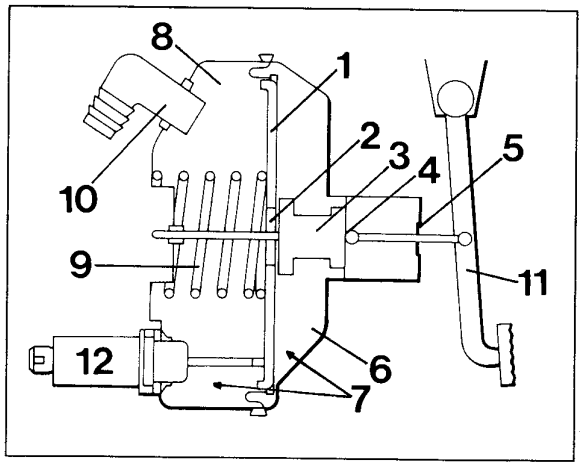


## Brakes applied

As the brake pedal (11) is depressed, the vacuum passage (2) is closed and the air passage (4) is constantly open. The greatest possible pressure difference acts on the diaphragm (1) and the maximum brake pressure is obtained.

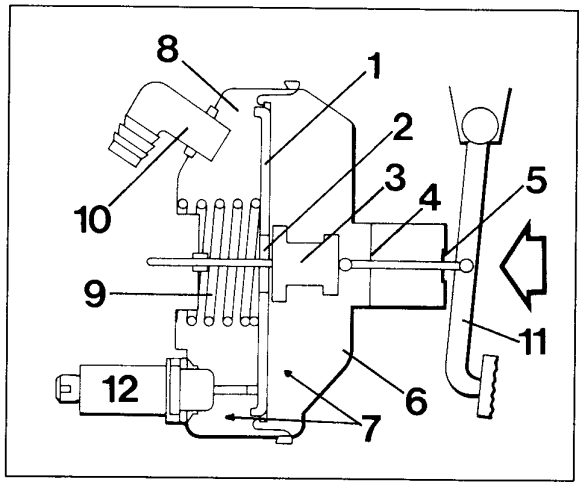


1 Diaphragm
2 Vacuum passage
3 Cross over valve
4 Air passage
5 Atmospheric pressure
6 Working chamber
7 Cylinder chamber
8 Vacuum chamber
9 Return spring
10 Non-return valve
11 Brake pedal
12 Travel sensor

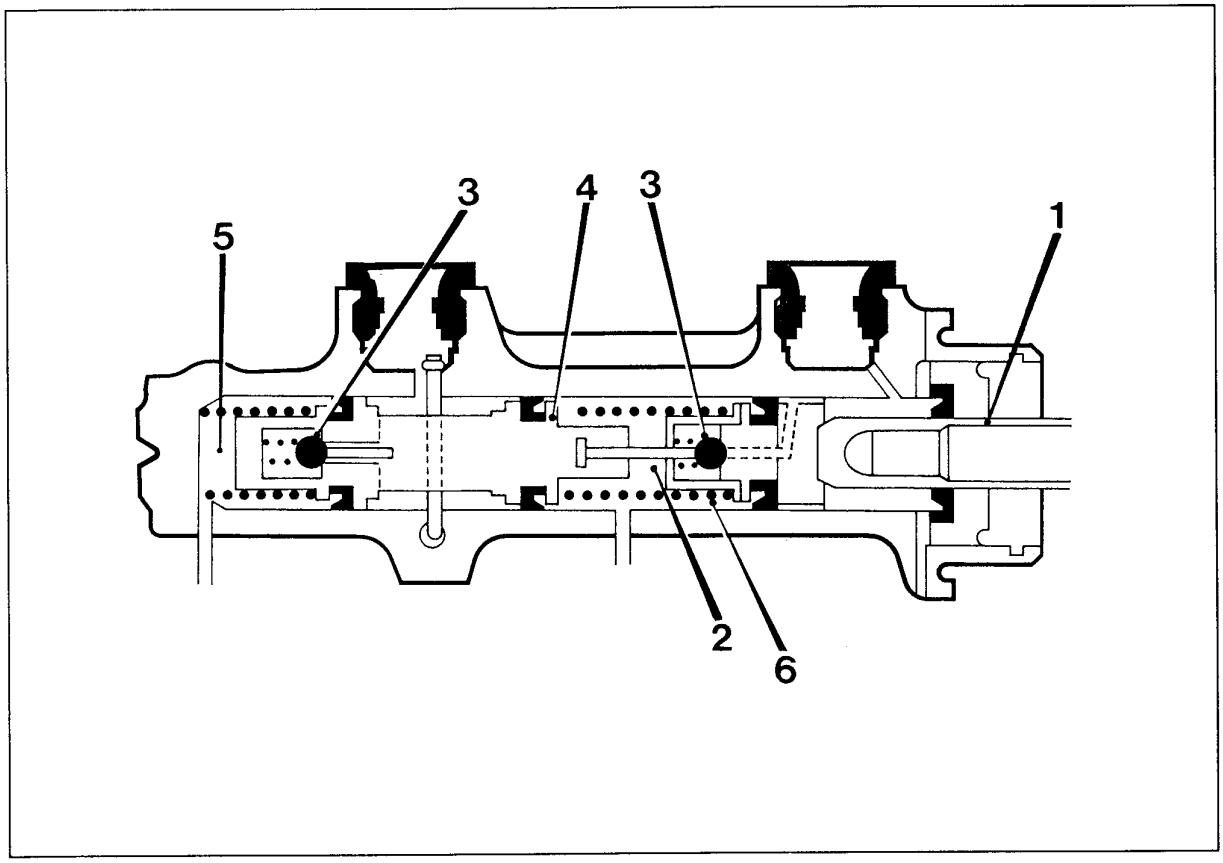


1 Pushrod with primary piston
2 Pressure chamber (primary circuit)
3 Steel central valves
4 Secondary piston
5 Pressure chamber (secondary circuit)
6 Compression spring

## Master cylinder

The master cylinder consists of a tandem cylinder made of aluminium.

The cylinder incorporates two pistons: a primary piston (next to the brake pedal) and a secondary piston.
A return spring for these pistons is also fitted. The master cylinder has connections for two brake lines and two hoses from the brake fluid reservoir.
Two central valves open the port to the brake fluid reservoir in the brakes off position so that the sealing rings are not damaged during braking when ABS is activated. These central valves replace cut-off ports to prevent damage to the sealing rings when ABS is activated. The central valves are made of steel to withstand the high pressure in the master cylinder.

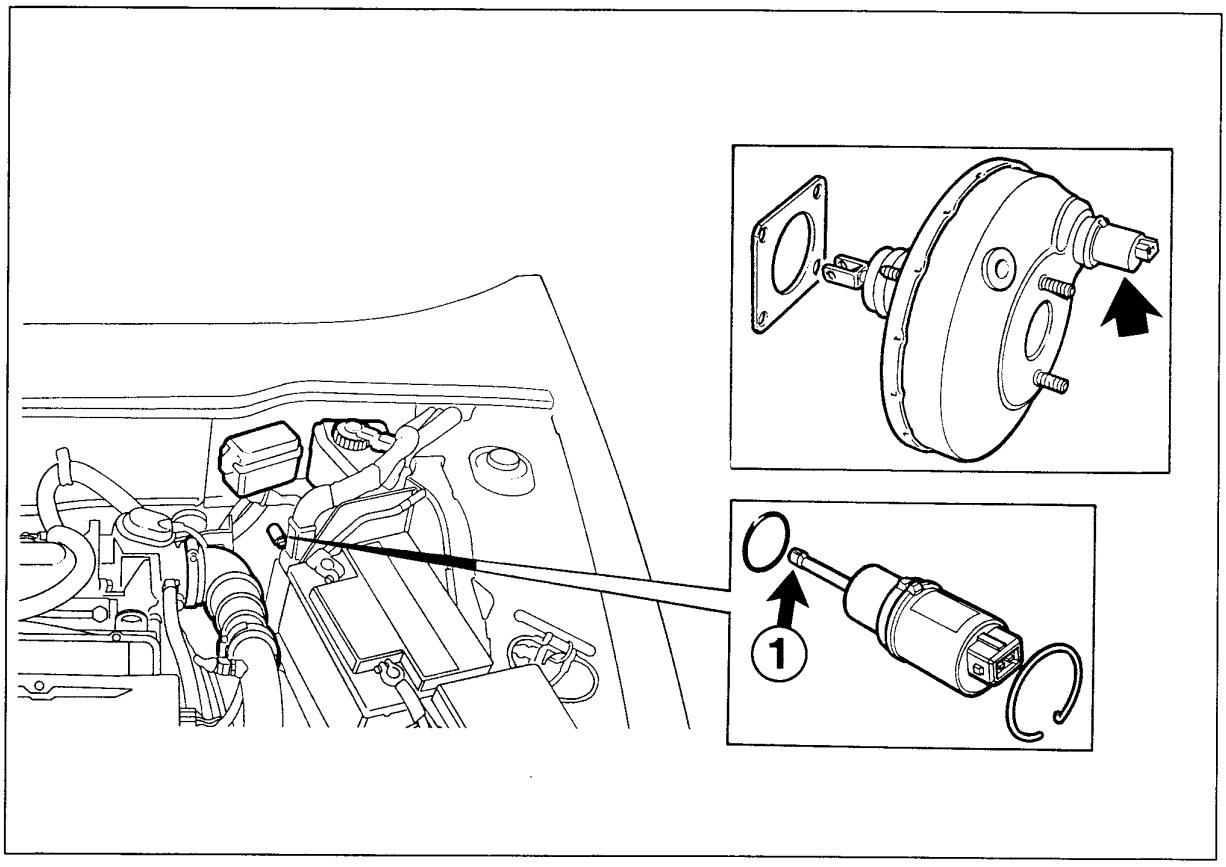


## Travel sensor

The travel sensor is mounted on the vacuum servo and consists of a set of resistors connected in series which are read by a sliding contact.

This enables the travel sensor to detect a total of seven pedal position points for evaluation by the ECU.

A pump test begins every time the car exceeds 30 km/h after starting. The pump then runs for around 300 msec.

If the pedal has reached the seventh position of the travel sensor (see table on next page), the pump will be started regardless of whether braking requires ABS or not. If the ECU does not modulate the pedal to the preceding position, the ABS warning light will come on.

If the ECU then detects a defect in the power supply, the ABS will be completely inoperative. Since vacuum servo manufacturing tolerances may vary, the vacuum servo is marked with a colour code. Adjusting sleeves of different colours (depending on size) are supplied with the vacuum servo and travel sensor as spare parts. On replacement of the vacuum servo or travel sensor, the sleeve with the same colour as the colour code on the vacuum servo must be fitted on the tip of the travel sensor (1).

## Diagram of travel sensor

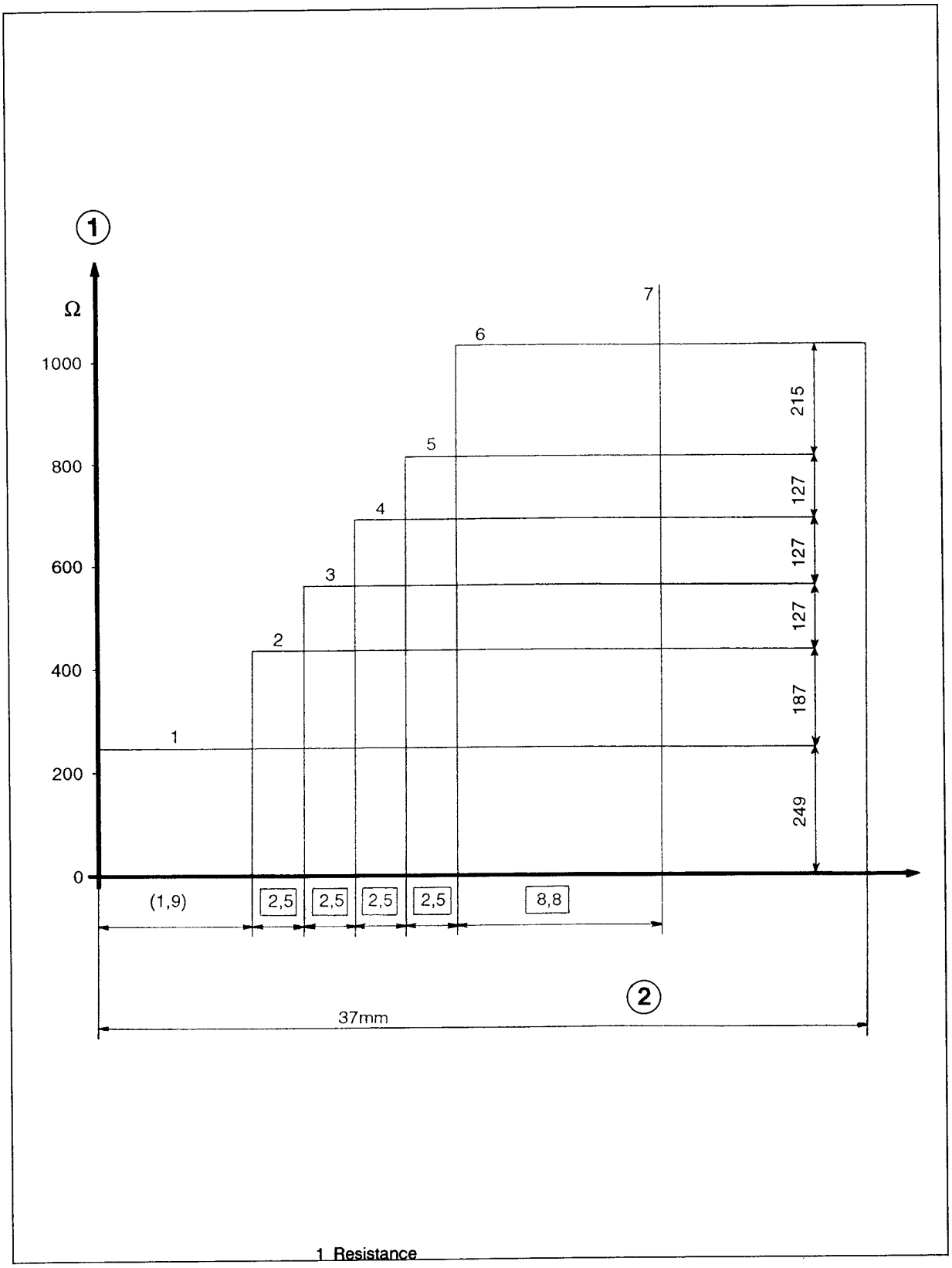


1 Resistance
2 Travel sensor

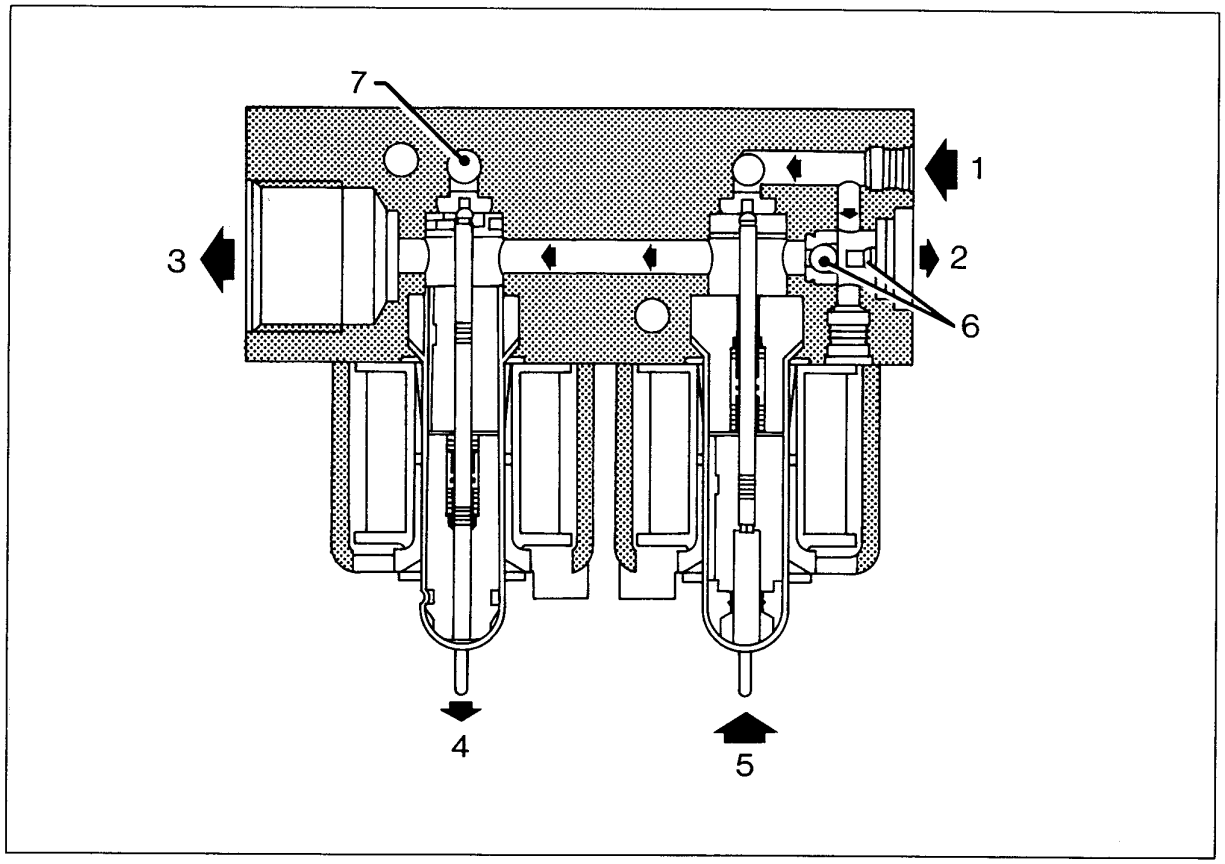


1 Brake fluid from master cylinder or pump
2 Return to master cylinder
3 To brake caliper
4 Activation of outlet valve
5 Closing of inlet valve
6 Master cylinder check valve
7 Return outlet valve

## Valve block

The valve block, which forms an integral unit with the hydraulic unit, modulates the brake pressure to the wheels during ABS-controlled braking.

There are eight solenoid valves in the block: four inlet valves and four outlet valves. There are two inlet and two outlet valves for each circuit, which means one inlet and one outlet valve per wheel. In the rest position (brakes off), the inlet valves are open and the outlet valves closed.

When the ECU senses that a wheel is being retarded too much, it modulates the brake pressure to the wheel in three phases:

**Phase 1**

Closes the inlet valve. This prevents pressure being increased in the circuit to the wheel brake and allows brake fluid to flow upstream of the inlet valve for use in phase 3.

**Phase 2**

Opens the outlet valve to release the pressure, thereby causing the speed of rotation of the wheel to increase.

**Phase 3**

Closes the outlet valve and opens the inlet valve, reducing the speed of rotation of the wheel. The "used" fluid is replaced by fluid supplied via the pump. The pump also supplies the master cylinder with fluid so that the pedal returns to its original position.
The pump runs until the travel sensor has returned to its original position when braking with activated ABS took place.

**Phases 2 and 3**

are repeated until the brake pedal is released or sufficient adhesion between the tyre and road surface is regained.
To ensure smooth braking, the valves open and close up to twelve times a second per wheel. In the event of a break in circuit continuity or a short circuit occurring, the valves will revert to their de-energized position, making conventional braking possible without ABS modulation.

## ECU

The ECU, which receives power from the system relay, is a sealed module. No attempt must be made to open it.
The function of the ECU is to process the information (signals) received from the wheel sensors and translate it into control (pwm) signals to the solenoid valves. The ECU monitors most of the electrical components of the ABS system. It also monitors itself for electronic circuit faults.
If a fault is detected, the ECU will cut out the ABS system and switch on the ABS (Anti-lock) warning light.

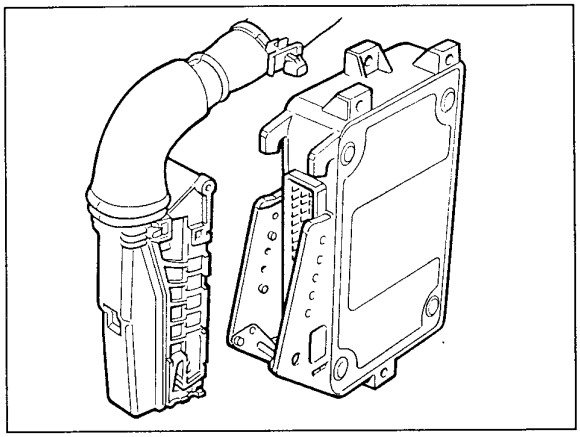

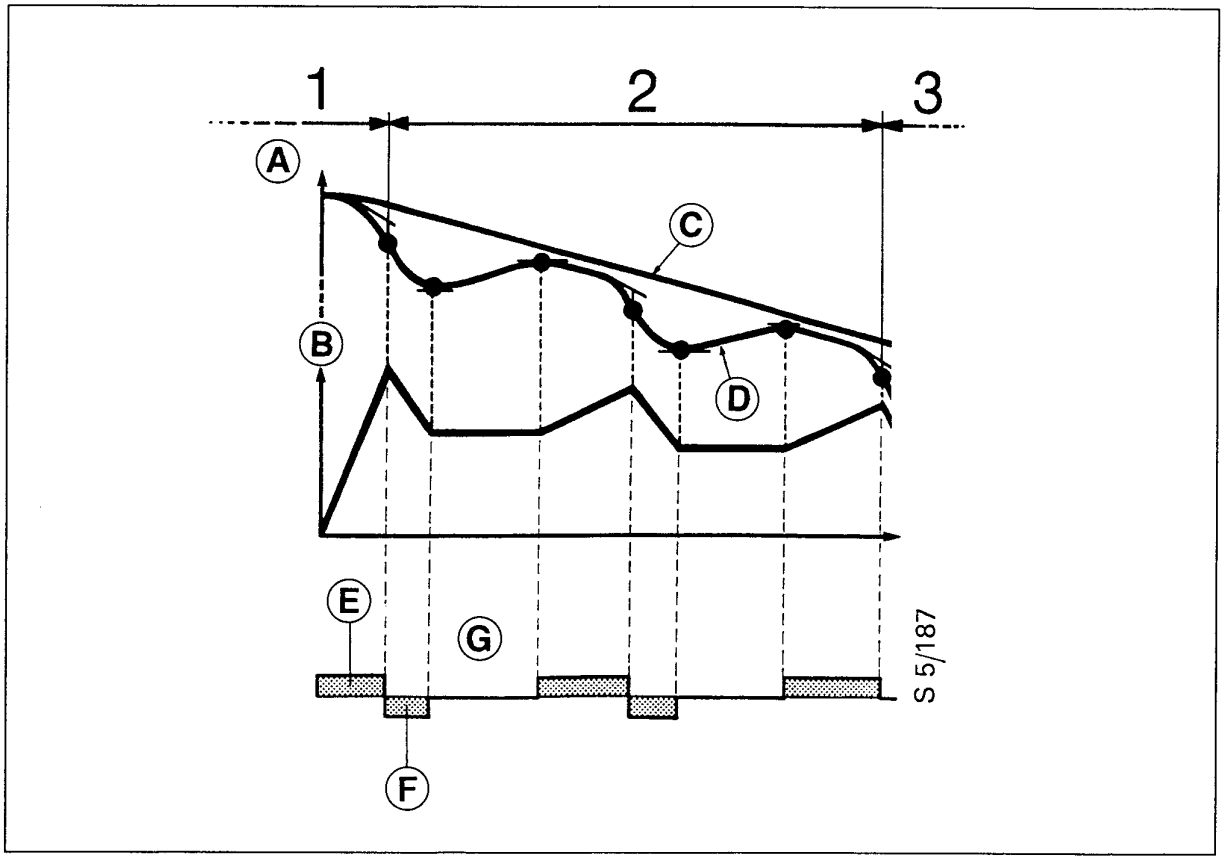


A. Speed
B. Brake force
C. Speed of car
D. Wheel rpm
E. Inlet valve open
F. Outlet valve open
G. Closed valves

The ABS system will be inoperative when the ECU detects a discontinuity in a valve block or wheel sensor circuit. The ignition must be switched off and the fault rectified before the ABS warning light can be extinguished and the ECU started up again. If the fault is rectified without the ignition being switched off, the ABS warning light will remain lit.
A weak signal level from the wheel sensors causes the ABS system to become inoperative and the ABS warning light to come on.
When the ABS system is inoperative, the brake system functions like a conventional brake system with a vacuum- assisted servo.
The signals from the wheel sensors are processed by the ECU, which computes a reference speed for the vehicle. The individual signals are then compared with this reference speed. If any of the signals depart from this reference value, the modulating procedure will be activated, as follows:

**Phase 1**

Lock-up tendency detected.
System prevents increase in brake pressure.

**Phase 2**

Initiation of ABS modulation.
Brake pressure reduced, held constant or increased, depending on increase or decrease in wheel rpm.

**Phase 3**

Tendency for wheel to lock gone.
Brake pressure increased depending on road adhesion checked in phase 2.

## ABS main fuse box

The relays and fuses for the ABS system are housed in a special fuse box fitted behind the false bulkhead panel.
This fuse box contains the system relay, with a fuse for the ECU, a relay and fuse for the hydraulic pump and an additional fuse for the ECU.

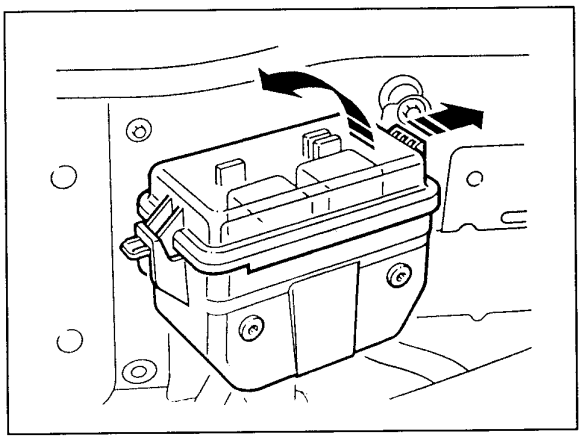

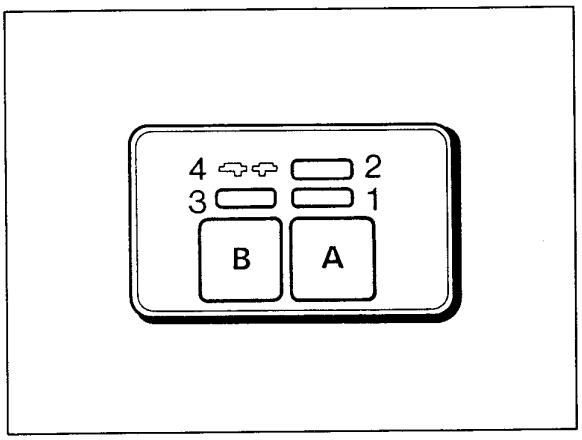


*ABS main fuse box*

A. Relay, hydraulic pump motor

B. Relay, ECU

1 Fuse, ECU (10 A, ABS)
2 Fuse, ECU (30 A, ABS)
3 Fuse, hydraulic pump motor (30 A pump)

## Brake warning and ABS warning lights

There are three warning lights for the brake system.

- Handbrake warning light (1)
- ABS (Anti-lock) warning light (2)
- Brake warning light (3)

**Note**

The handbrake warning light is not affected by the ABS system. Nor does ABS affect the fluid level warning light. The handbrake and fluid level warning lights are not controlled by the ECU.

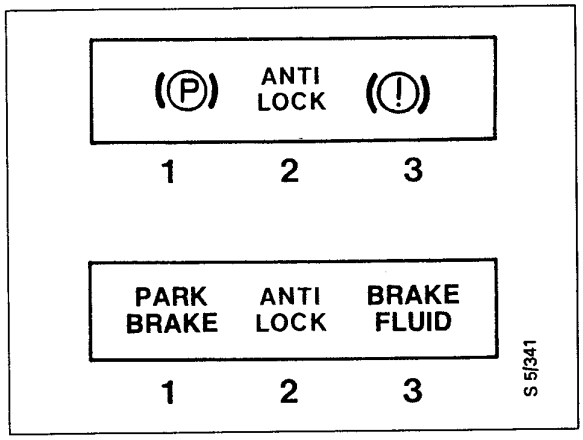

## Brake warning light on:

The warning light alone will come on if the level of fluid in the reservoir drops below the MIN mark.
The brakes and ABS system will continue to operate normally.
The car must not be driven any further until it has been inspected, as the cause may be a leak in the system.

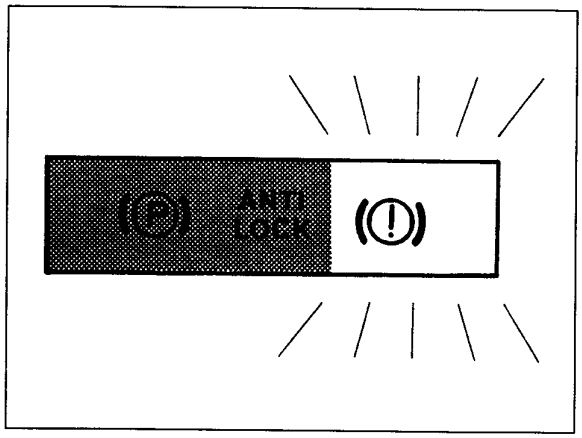


## ABS warning light on:

The ABS (Anti-lock) warning light alone will come on if the ECU detects a fault in the ABS system.
Conventional braking power will be available but the ABS system will be inoperative.

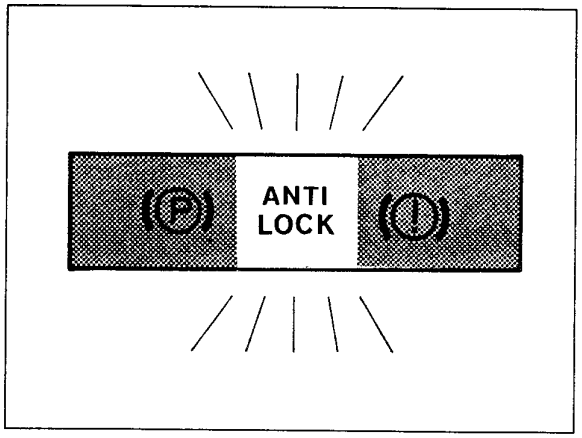

## Wheel sensors

The wheel sensors operate on the generator principle, i.e. a current is induced in a conductor by distortion of the magnetic field surrounding it. Distortion of the magnetic field around the sensor is caused by the toothed sensor as it passes the sensor body: each time a tooth passes the sensor, the magnetic field is reinforced. Each time a gap between the teeth passes the sensor, the magnetic field is weakened. Put simply, this means that a positive (+) current is generated by each tooth and a negative (-) current by each gap between the teeth. This gives rise to an alternating current, the frequency and amplitude of which (the number of cycles per second and half the peak-to-peak value respectively) varies with the speed at which the sensor wheel is turning. From this signal, the ECU can deduce the speed of rotation of the wheel.

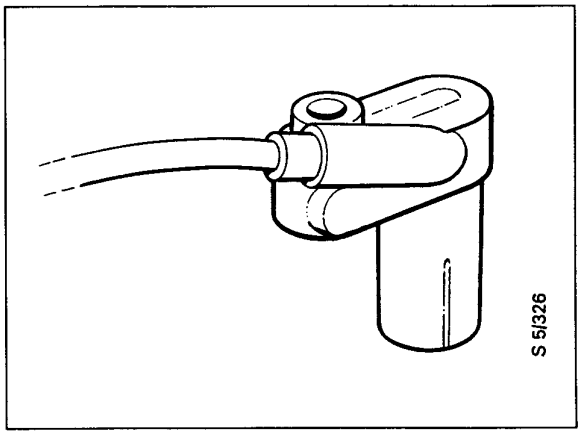


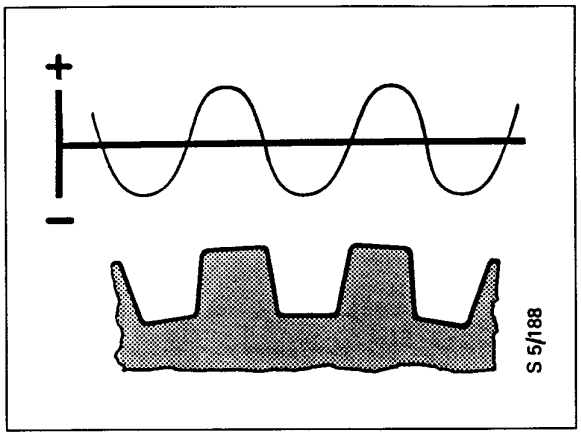


*Sensor wheel*

## Front-wheel sensor and sensor wheel

Each sensor has a trigger sensor wheel, which is press-fitted onto the constant velocity joint. The sensor wheel cannot be removed.

The front wheel sensors are mounted radially relative to the trigger wheel on the steering swivel member.

The sensor leads can be disconnected by means of a connector in the engine compartment.

## Rear-wheel sensor and sensor wheel

Because the sensor is orientated axially relative to the sensor wheel, the design of the rear sensor wheels is different to that of the front ones. The sensor wheel is press-fitted onto the rear-wheel hub and cannot be removed.

The sensor leads can be disconnected by means of a connector underneath the rear seat.

# ABS control: description of operation

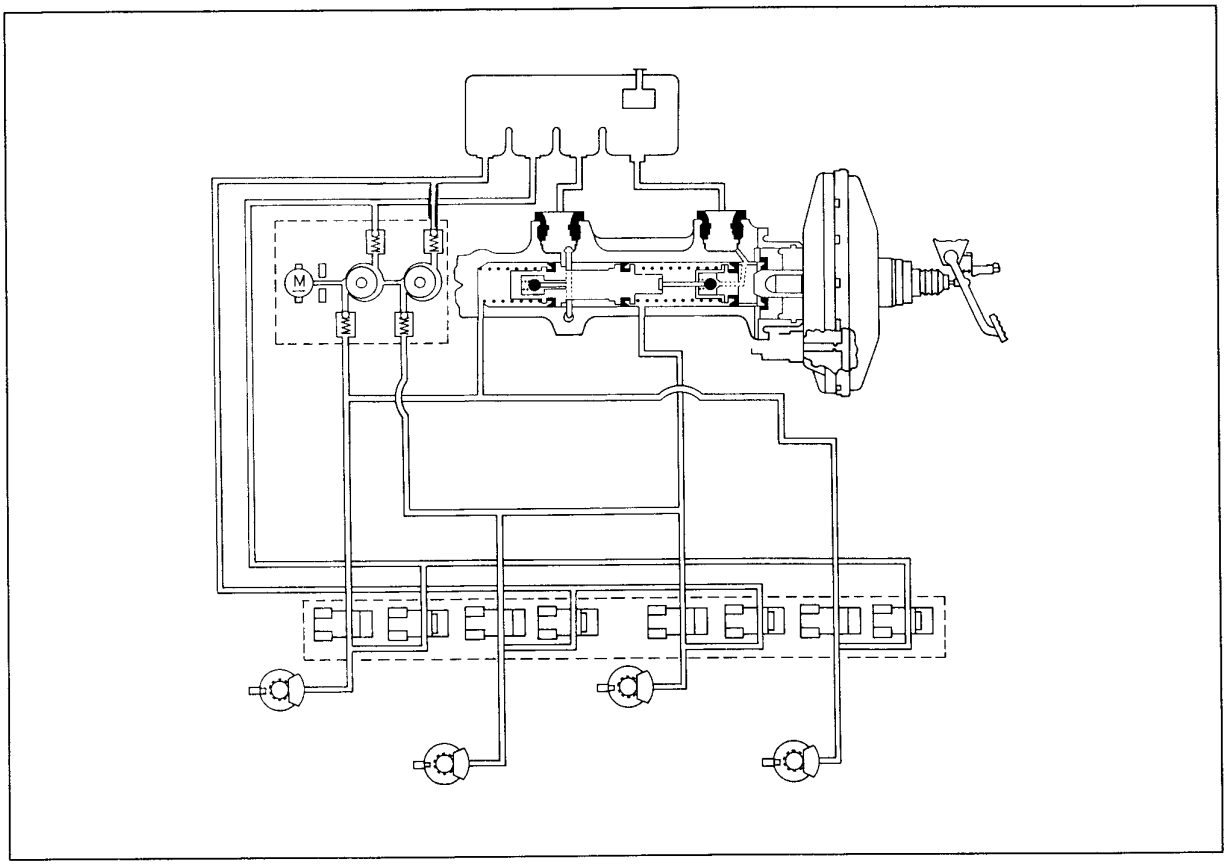


The brake system can be in one of four conditions:
1 Brakes off
2 Brakes applied without ABS modulation
3 Brakes applied with ABS modulation
4 ABS operation with one brake circuit inoperative

## Brakes off

In the brakes off position the diaphragm of the vacuum- operated servo and the valve piston are pressed against the rear end position by the return spring. The same vacuum exists on both sides of the diaphragm because an overflow valve in the diaphragm is open. The return spring of the master cylinder is forced against the rear end position. In this position both central valves are open and the brake system is kept at atmospheric pressure. A stop pin prevents the pistons from moving backwards. The complete brake system is held at atmospheric pressure.

The inlet and outlet valves in the valve block are in the rest (de-energized) position. The central valves are open.

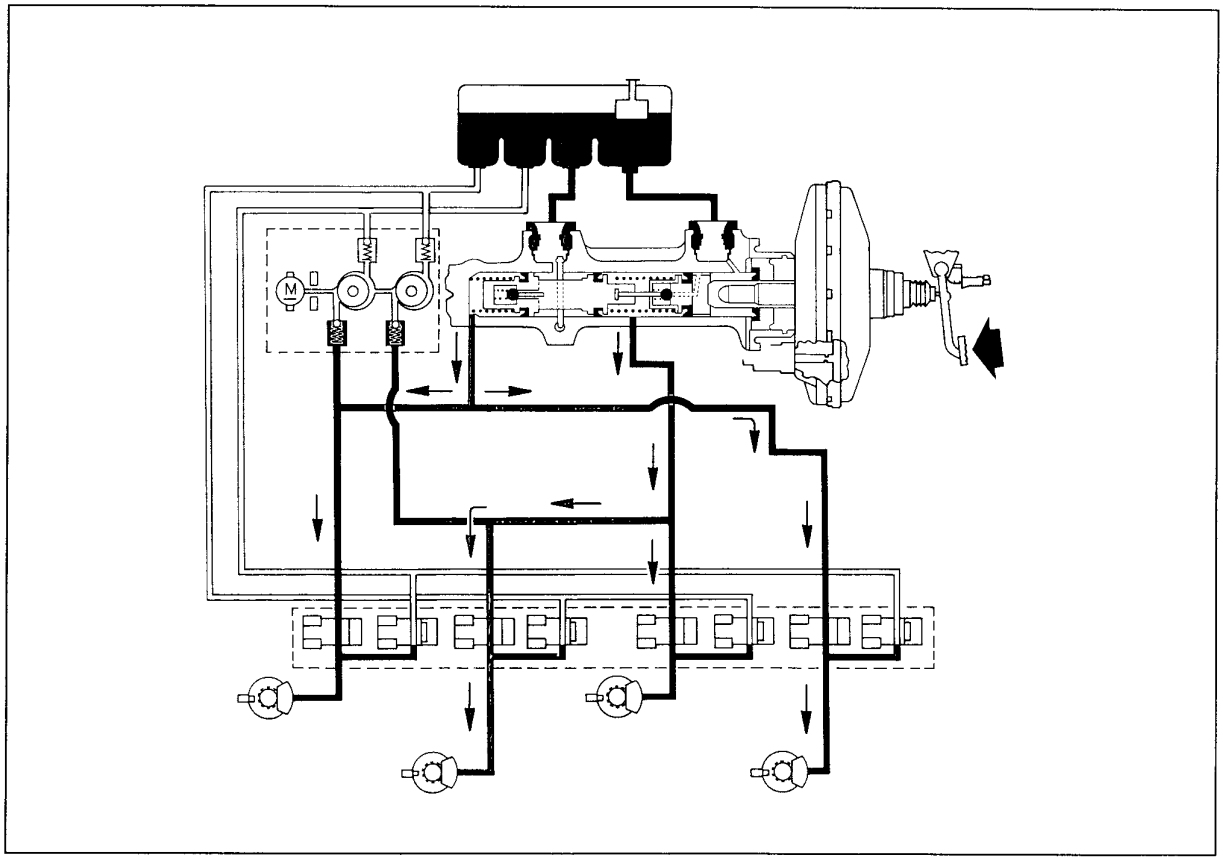


## Brakes applied without ABS modulation

When the brake pedal is depressed, the vacuum passage is closed and the air passage is constantly open. The greatest possible pressure difference acts on the diaphragm, resulting in maximum braking pressure.
Full power assistance is obtained in the brake system

The central valve of the primary piston in the master cylinder is closed and the pressure in front of the primary piston rises. The pressure also acts on the secondary piston which is pushed forwards, with the result that the central valve of the secondary piston is also closed.

The hydraulic pressure in the two brake circuits rises, and as the surface areas of the pistons are identical, the pressure through the brake system is the same in both brake circuits.
The pressure is propagated through the brake system and acts on the brake piston in each brake housing. The brake pistons force the brake pads against the brake discs. When the brake pedal is released, the pistons in the master cylinder are returned and the central valves open. The pressure drops and the brake piston in each brake caliper stays in the brakes off position by means of the piston sealing ring.

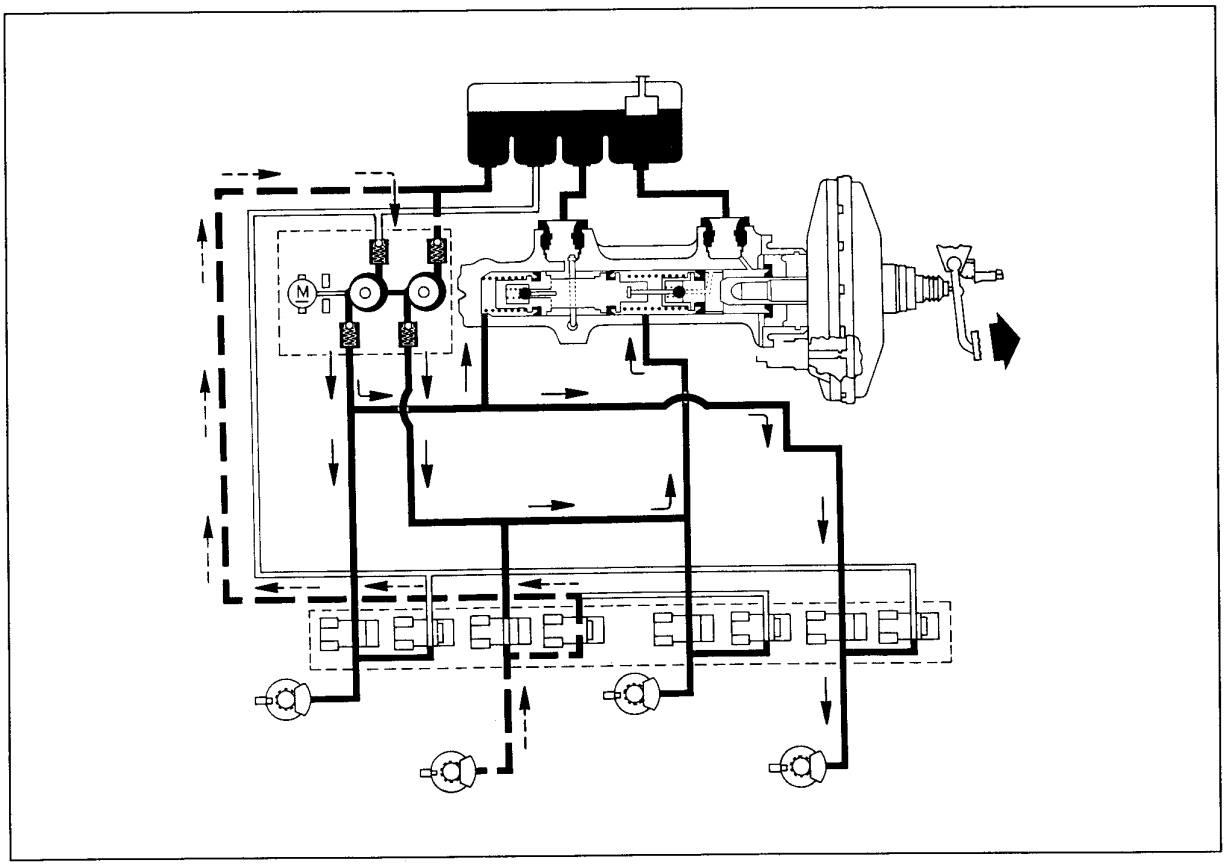


## Brakes applied with ABS modulation

ABS modulation is initiated when the system detects a tendency for a wheel to lock. The ECU receives information on wheel rpm from a sensor on each wheel. If there is a tendency for the wheels to lock, the ECU modulates the braking force with the aid of electrical control valves. The braking force is modulated on each wheel separately.

The hydraulic unit only operates in the ABS position. The pressure applied to the inlet and outlet valves is modulated with the aid of the hydraulic pump. The pressure of the brake fluid supplied is determined by the brake pressure in the master cylinder, which is in turn proportional to the force applied to the brake pedal.

The pressure in the respective circuits is dependent on the retardation in wheel speed sensed by the sensors. The ECU controls the inlet and outlet valves so that maximum braking force (coefficient of adhesion) is maintained between the wheel and road surface (occurring at approx. 20%slip).

ABS-modulated braking will continue until:

- the car has been brought to a standstill
- the force applied by the driver to the brake pedal has been reduced to the level at which there is no danger of the wheels locking (determined by the relationship between braking force and the coefficient of adhesion).
  The brake pressure is modulated by the position of the brake pedal. The hydraulic pump starts up and braking takes place through the pressure of the hydraulic pump. The pump pressure also returns the brake pedal to its original position.

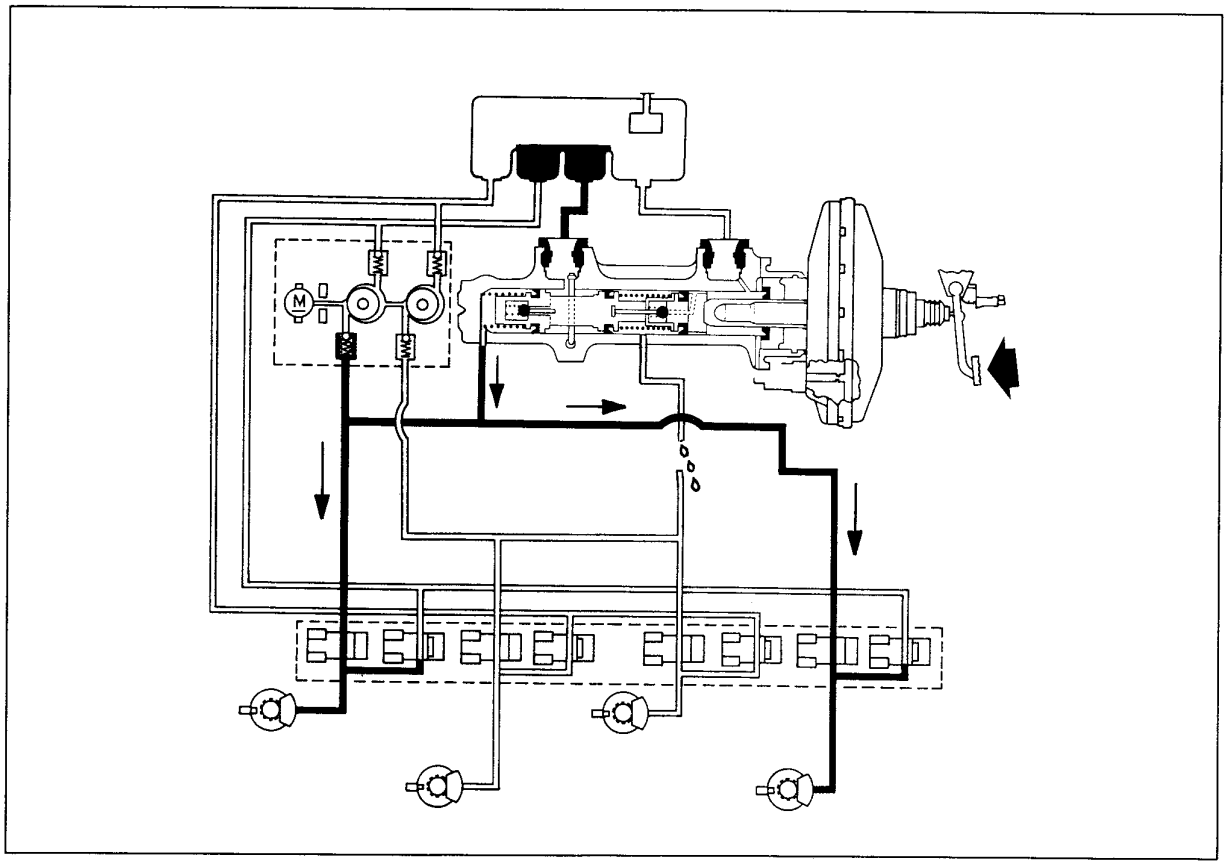

## Brakes applied with ABS modulation (one circuit inoperative)

When the brake pedal is depressed and a leak has occurred for example in the primary circuit, the primary piston is pressed forwards by the pushrod until it acts mechanically on the secondary piston. The secondary piston closes the central valve and hydraulic pressure is built up in the secondary circuit.

In the event of leaks in the secondary circuit, the secondary piston is pressed forwards to the end of its travel in the master cylinder.
In both events a longer pedal movement is required so that the desired braking effect is obtained.

ABS braking effect is then only obtained on the circuit which is operative, and the brake fluid level warning light will come on.
In the event of braking without ABS with one circuit inoperati ve, the brake system will provide power assistance to the operative circuit.

If the pedal position transmitter reaches its last position (position seven), the hydraulic pump will start up regardless of the type of brake.

# Component removal/fitting

**Hydraulic unit** . . . . . 510- 1
**Master cylinder** . . . . . 510- 3
**Vacuum-operated servo**. . . . . 510- 4
**ECU** . . . . . 510- 5
**Travel sensor** . . . . . 510- 6
**Wheel sensors**. . . . . 510- 7

## Hydraulic unit

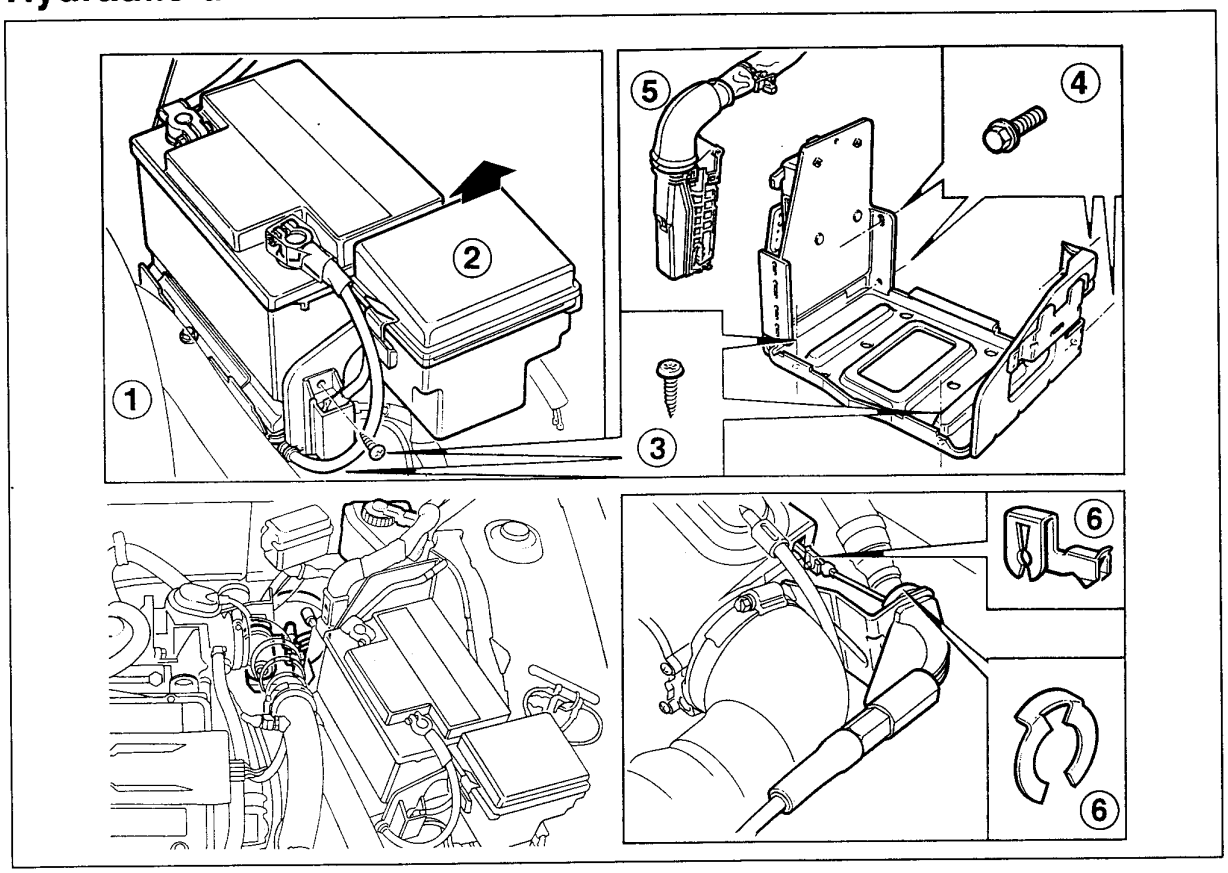


**WARNING**
Before starting work, thoroughly clean the unit, connections and surrounding surfaces to prevent dirt getting into the hydraulics.

## To remove

1 Disconnect the battery leads and the bolt (1) securing the battery to the tray.

Remove the battery

Also unplug the main fuse box (2) by lifting it.

2 Disconnect the battery tray by undoing the four screws (3) and the four bolts (4).

3 Unplug the connector (5) from the ECU on the side of the battery tray and unplug the ABS wiring loom clip.

4 Remove the throttle cable from the throttle housing by disconnecting the two clips (6).

5 Pull the ABS main fuse box (7) and brake fluid reservoir (8) out of their brackets.

6 Use brake bleeder unit part no. 88 19 096 to siphon the brake fluid out of the reservoir.

Manual cars:

Disconnect the hose for the clutch cylinder from the brake fluid reservoir.

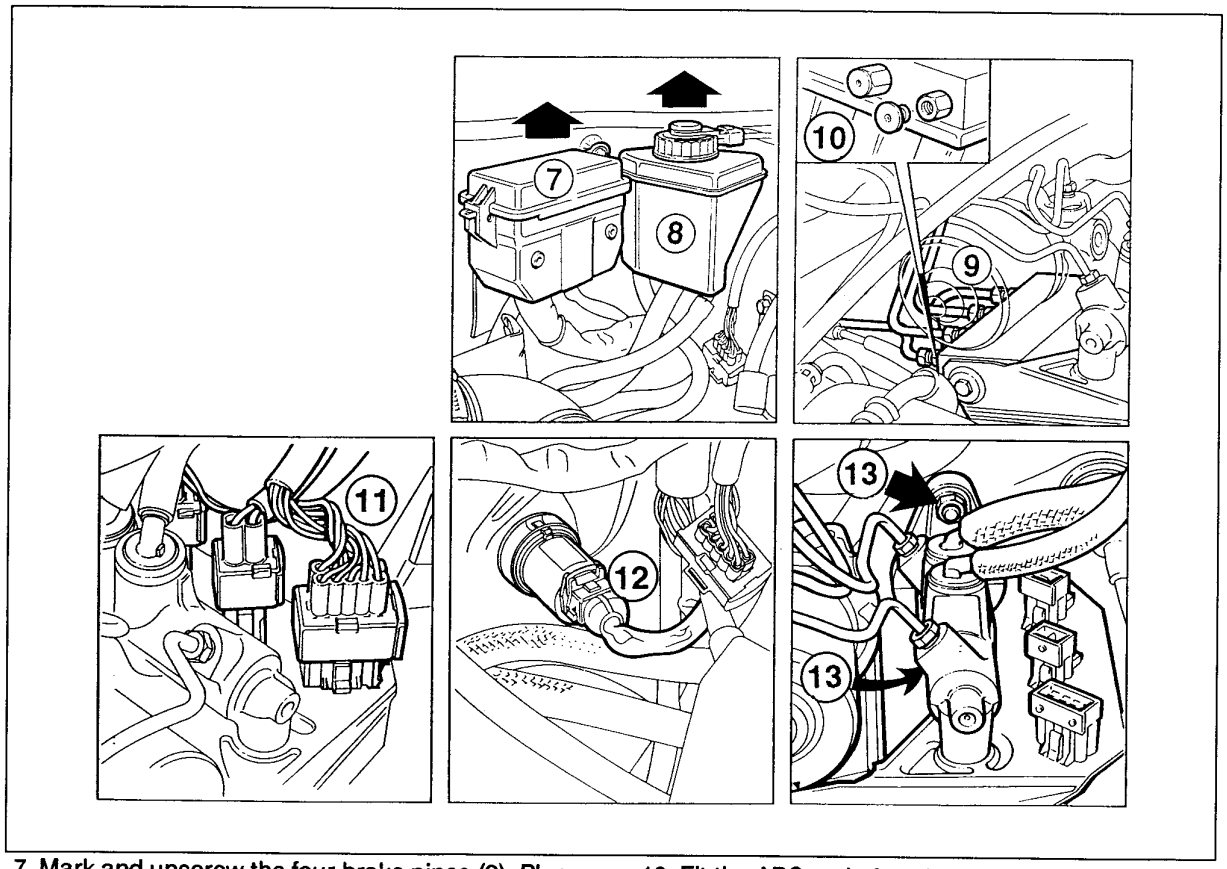


7 Mark and unscrew the four brake pipes (9). Plug the ends of the valve block (10) and brake pipes.

8 Disconnect the three connectors (11) and the connector (12) of the travel sensor.

9 Undo the two nuts (13) holding the hydraulic unit.

10 Remove the unit.

## To fit

1 Tighten the two hydraulic unit retaining nuts (13).

2 Remove the plugs (10) from the valve block and brake pipes. Attach the brake pipes (9) to the valve block.

3 Fit the three connectors (11) and the connector of the travel sensor (12).

4 Plug in connector (5) for the ABS ECU on the loosened battery tray.

5 Fit the battery tray by tightening the four screws (4) and the four bolts (3).

Fix the ABS wiring loom to the battery tray.

6 Fit the battery and tighten the nut (1) holding the battery bracket.

7 Press the main fuse box (2) firmly into its bracket.

8 Fit the throttle cable and the two clips (6).

9 Fit the hose for the clutch cylinder on the brake fluid reservoir (manual cars only).

10 Fit the ABS main fuse box and brake fluid reservoir. Top up with DOT 4 brake fluid.

11 Bleed the brake system. **(if the hydraulic unit has been changed: see section 520 "Bleeding the brake system when changing the hydraulic unit.)**

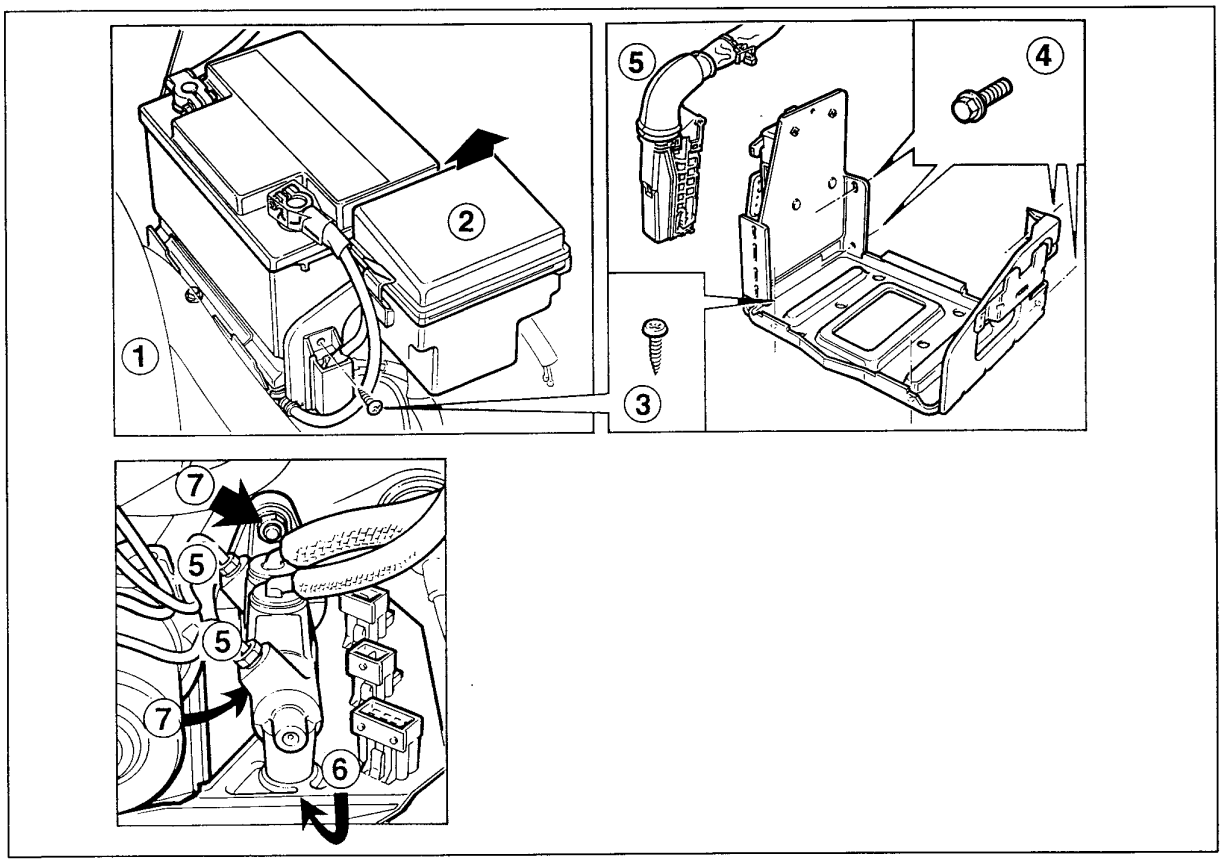


# Master cylinder

## To remove

1 Clean around the ends of the brake pipes.

2 Disconnect the battery leads and the bolt (1) holding the battery to the tray.
Remove the battery.
Also unplug the main fuse box (2) by pulling it upwards.

3 Disconnect the battery tray by unscrewing the four screws (3) and the four bolts (4).

4 Drain the brake fluid reservoir and move the cover out of the way.

5 Remove the primary and secondary pipes of the master cylinder (5).

6 Undo the securing bolt underneath the master cylinder (6).

7 Remove the two nuts (7) securing the master cylinder to the vacuum-operated servo.

8 Remove the master cylinder and brake fluid reservoir.
Remove the hoses from the master cylinder.

## To fit

1 Fit the hoses to the new master cylinder.
Press the hydraulic fluid reservoir firmly home and install the master cylinder.

2 Tighten the two nuts (7) securing the master cylinder to the vacuum-operated servo.
Tighten the securing bolt underneath the master cylinder (6).

3 Refit the primary and secondary pipes of the master cylinder (5).

4 Top up with DOT 4 brake fluid.

5 Refit the battery tray by tightening the four bolts (4) and the four screws (3).
Attach the ABS wiring loom to the battery tray.

6 Fit the battery and tighten the nut (1) holding the battery to its bracket.

7 Press the main fuse box (2) home in its bracket.

8 Bleed the brake system
Test drive the car and check that the system is working.

# Vacuum-operated servo

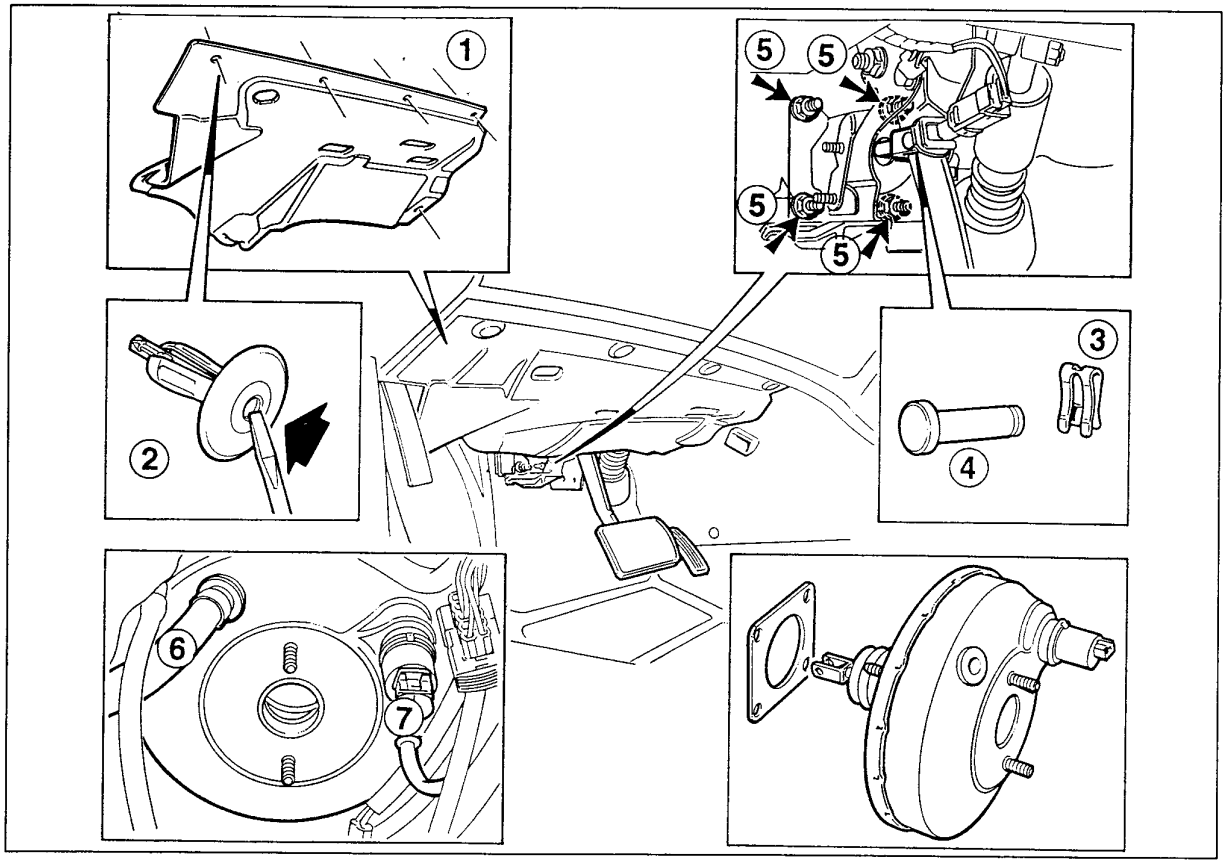


## To remove

1 Remove the ABS unit (see section 510 pages 1-2).

2 Disconnect the lower dash panel (1) by pressing the locking pins (4 mm) on the five plastic clips (2) with a screwdriver.

3 Disconnect the clip (3) and pin (4) from the push-rod.

4 Unscrew the four retaining nuts (5) holding the vacuum- operated servo.

5 Disconnect the vacuum hose (6) and travel sensor connector (7) from the vacuum-operated servo.

6 Remove the vacuum-operated servo unit. When changing the vacuum servo unit, the travel sensor must be transferred to the new servo unit. The adjusting sleeve having the same colour as the colour marking on the vacuum servo unit should be fitted on the travel sensor.

## To fit

1 Have a helper press the pedal so that the holes on the pedal assembly and bulkhead coincide when the vacuum-operated servo is installed.

Tighten the four retaining nuts (5) holding the vacuum- operated servo.

2 Reconnect the pin (4) and clip (3) to the push-rod.

3 Refit the lower dash panel (1) by pressing in the five plastic clips (2).

4 Refit the travel sensor connector (7) and press the vacuum hose (6) home.

5 Refit the ABS unit.
(see section 510 pages 1-2).

# ECU

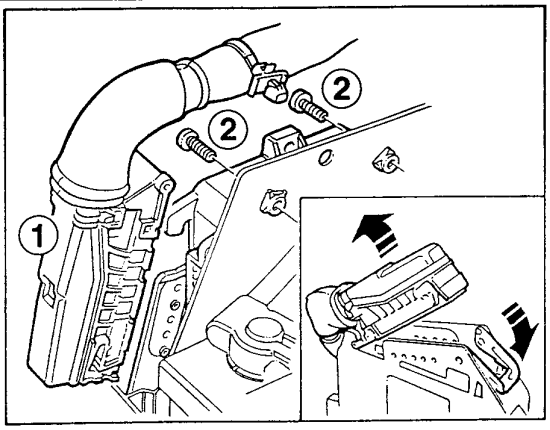


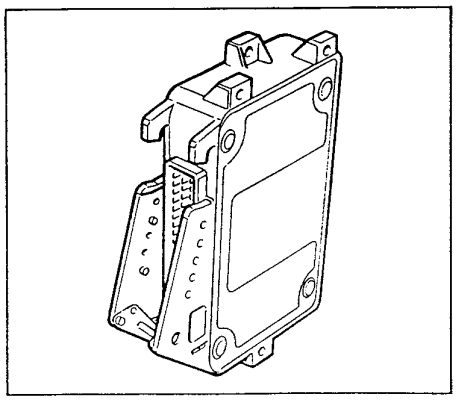

## To remove

1 Disconnect the battery leads and the clip of the ABS wiring loom on the battery tray.

2 Unplug the connector (1) from the ECU.

3 Undo the two securing bolts (2).

Remove the ECU.

## To fit

1 Fit the new ECU by tightening the two screws (2).

2 Plug the connector (1) into the ECU.

3 Attach the ABS wiring loom to the battery tray.

Reconnect the battery leads.

# Travel sensor

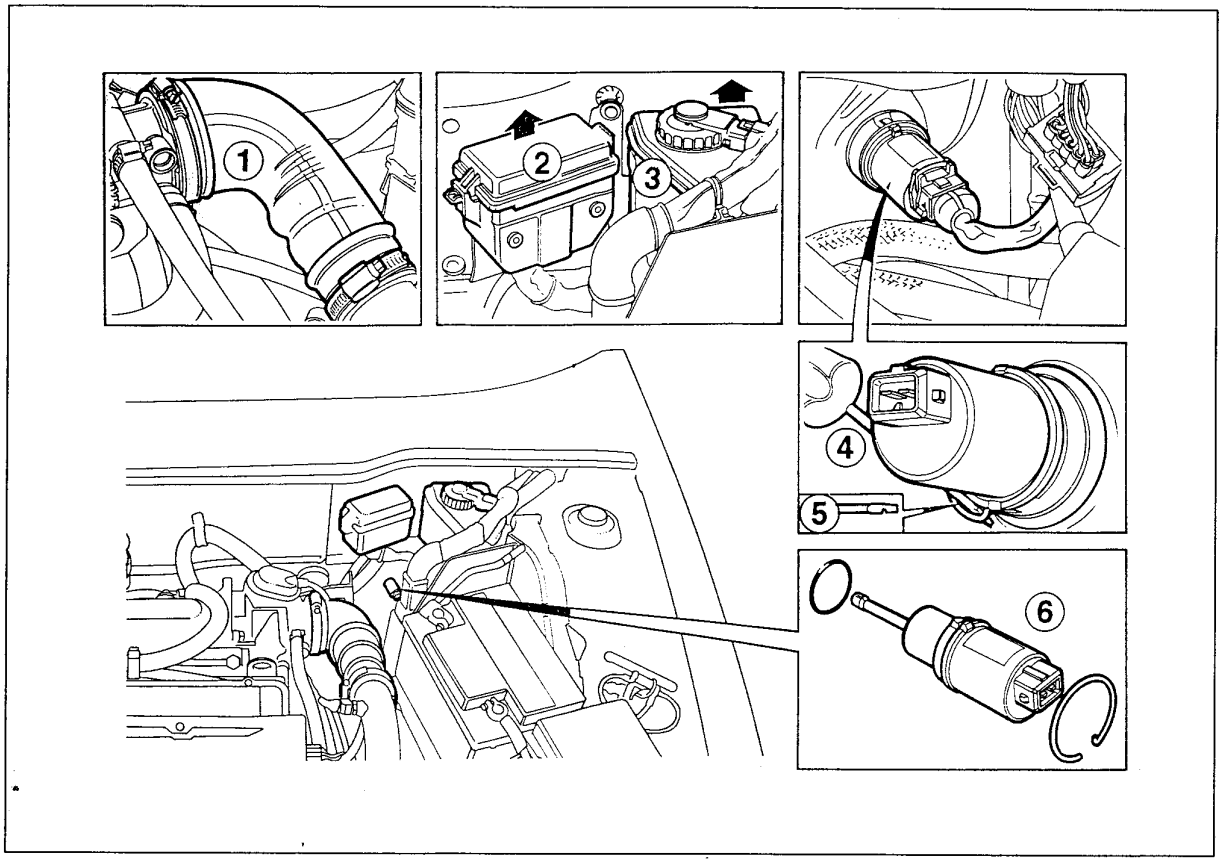


## To remove

1 Remove the rubber elbow (1) from the throttle housing.

2 Undo the ABS main fuse box (2) and the brake fluid reservoir (3).

3 Unplug the connectors from the hydraulic unit.

4 Remove the circlip underneath the travel sensor using a small screwdriver (4).

It is easier to remove the circlip if a notch is made in the screwdriver blade (5).

5 Withdraw the travel sensor (6). Remove the O-ring.

## To fit

1 When changing the travel sensor, fit it with the supplied adjusting sleeve having the same colour as the colour marking on the vacuum servo unit. See page 500-16.

2 Fit the new travel sensor with a new O-ring and press the sensor home.

3 Fit the circlip (4). Make sure the hook on the circlip faces downwards.

4 Refit the three connectors to the hydraulic unit.

5 Press the brake fluid reservoir (3) and the ABS main fuse box (2) firmly into their brackets.

6 Reconnect the rubber elbow (1) to the throttle body.

# Wheel sensors, front wheels

## To remove

1 Unplug the sensor lead connector (one for each wheel) in the engine bay by pushing the halves together to release the catches.

On the LH side:

Lift the rubber moulding on the bulkhead panel. Remove the cover over the space behind the bulkhead panel. Undo the plastic clip at the panel.

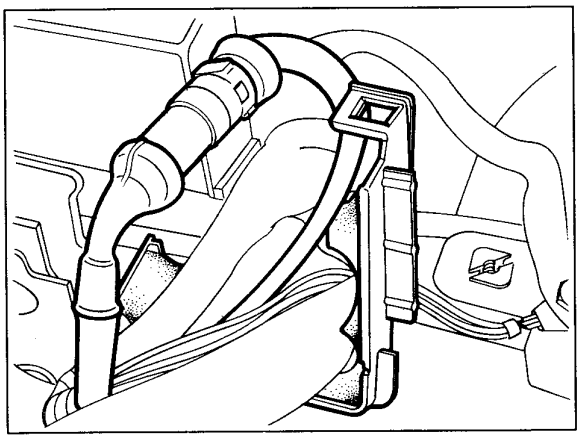

On the RH side:

a) Lift the rubber moulding on the bulkhead panel. Remove the cover over the space behind the bulkhead panel. Undo the plastic clip at the panel.

b) Raise the AC pipes and pull the sensor lead through.

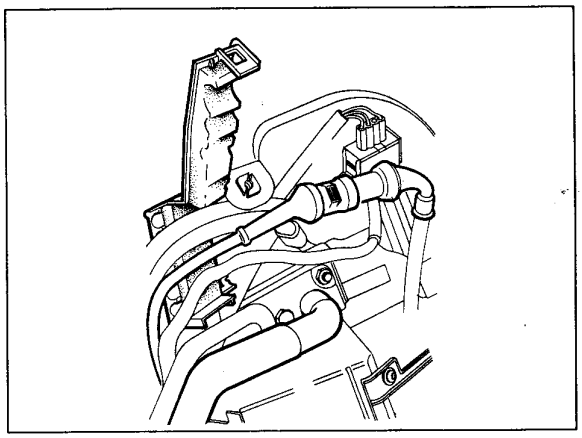

2 Raise the car and remove the front wheel (or wheels).

3 Remove the rear section of the wing liner.

4 Snip through the cable tie securing the sensor lead to the top bracket.

Pull the sensor lead through the rubber grommet in the wheel housing.

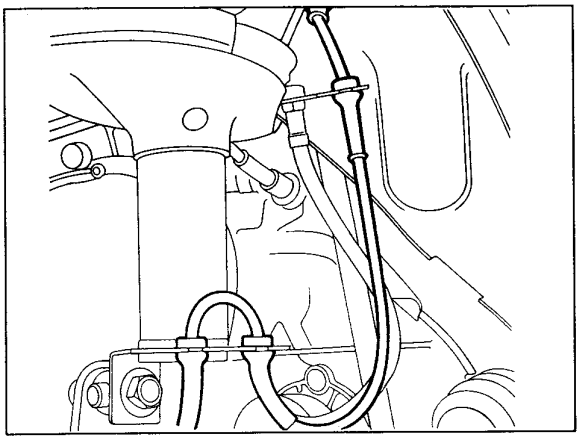

5 Undo the securing bolt and remove the sensor.

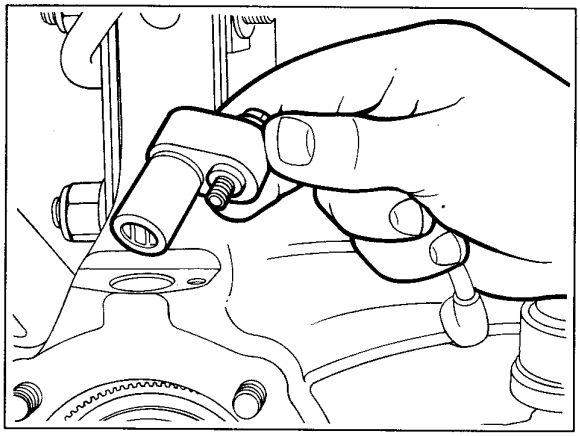

## Rear-wheel sensors

**To remove**

1 Tilt the rear seat forward and remove the cover on the LH and/or RH side of the floor.

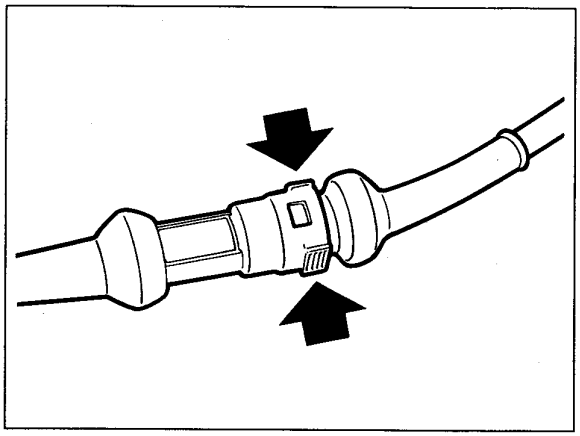

2 Unplug the sensor lead from the brackets by snipping through the tie on the top bracket.

3 Raise the car and remove the rear wheel or wheels.

4 Undo the clip and pull the sensor lead through the rubber grommet in the floor.

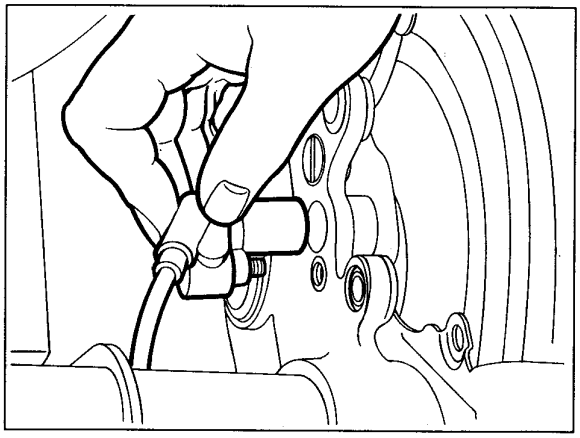

5 Undo the securing bolt and remove the sensor.

## To fit, wheel sensors

### Front-wheel sensors

1 Fit the sensor, tightening the securing bolt.
2 Pass the sensor lead through the rubber grommet in the wheel housing and secure it in the brackets. Fit a cable tie around the top one.
3 Plug the lead into the connector in the engine bay.

Refit the components that have been removed.

4 Refit the wing liner.
5 Refit the front wheel or wheels.

Turning the steering from lock to lock, check that the sensor lead cannot rub against any front- assembly components.

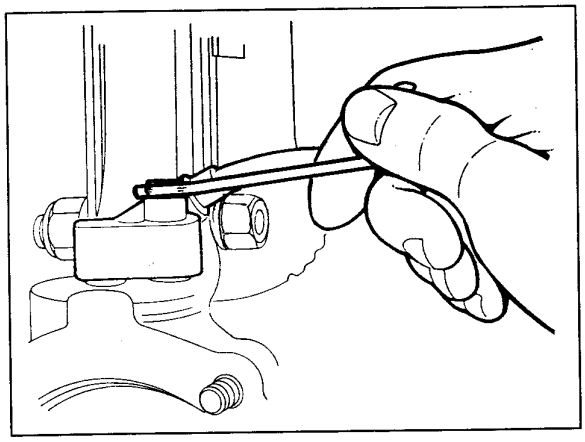

### Rear-wheel sensors

1 Fit the sensor, tightening the securing bolt.
2 Refit the clip for the lead and the rubber grommet.
3 Plug in the connector under the rear seat.
4 Refit the cover.
5 Refit the rear wheel or wheels.

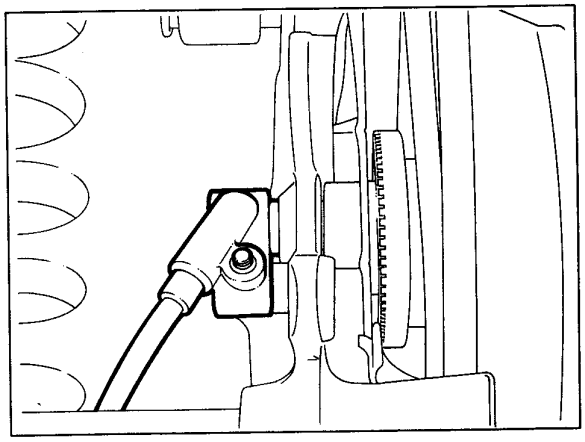

# Bleeding the brake system when changing the hydraulic unit

## Bleeding with the brake bleeder unit

1 Unscrew the cover on the brake fluid reservoir.

Connect a topping-up bottle to the topping-up fitting (supplied in brake bleeder unit kit part no. 88 19 096) and clamp the topping-up fitting onto the brake fluid reservoir to eliminate the risk of the reservoir being drained.

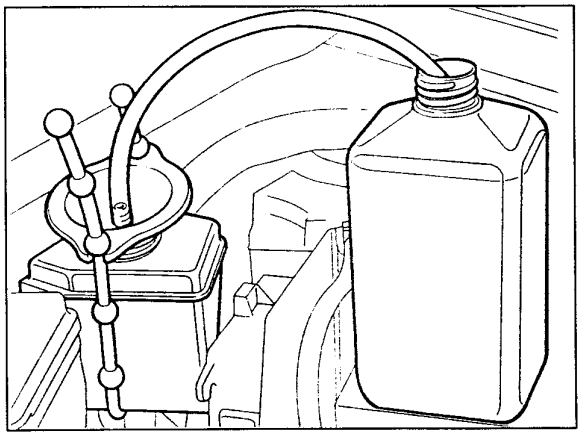

2 Undo the connector from the ECU.

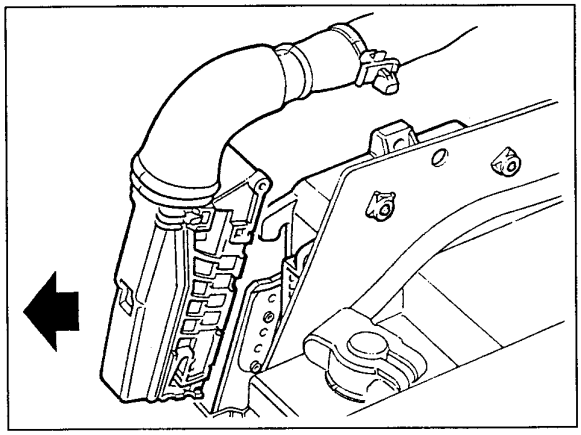

3 Plug the connector of the breakout box into the ABS Mark IV connector for the ECU.

Connect wiring looms 1 (pins 1, 34 and 15) and 2 (pins 18, 36, 21 and 2) (part no. 86 11 212).

Connect pin 1 when the ignition is switched on. Run the pump for one minute. Connect the battery terminal twenty seconds after the pump has started up so that the outlet valves are opened. Disconnect the battery terminal after a further twenty seconds.

Disconnect pin 1 sixty seconds after the pump has started up.

Switch off the ignition.

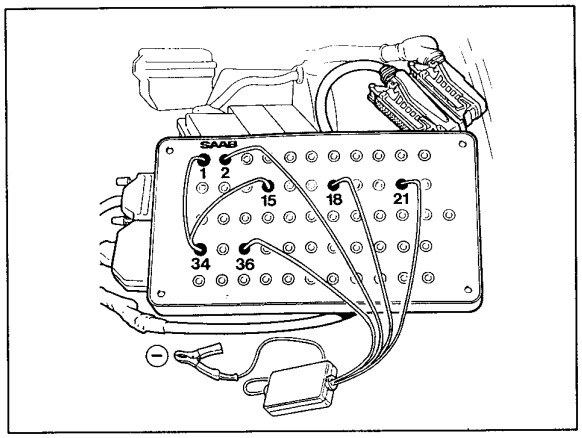

Bleed the system using the bleeder unit (part no. 88 19 096)

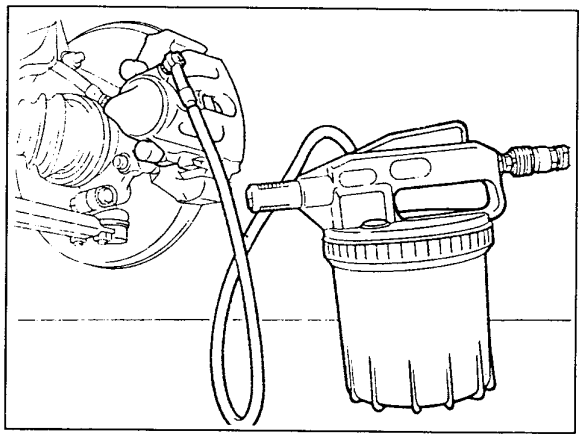

Bleeding must be carried out in the following sequence:
right-hand front wheel, left-hand rear wheel, left-hand front wheel and right-hand rear wheel.
When changing the brake fluid, the contents of the brake fluid reservoir must be siphoned off and each brake caliper must be drained of the amount of fluid indicated in the figure.

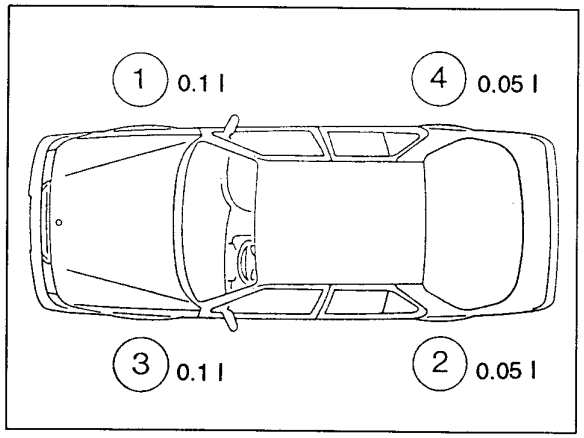


4 Plug in the connector of the ECU.

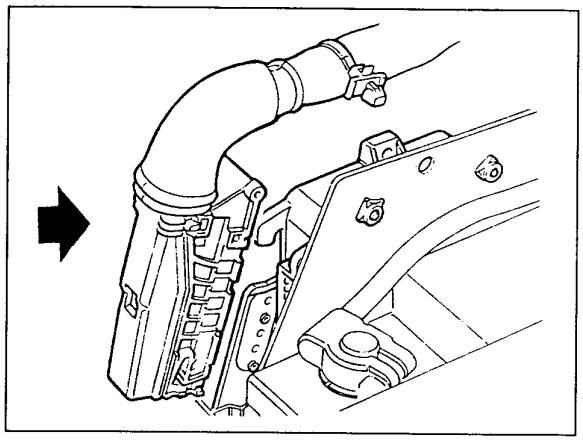

5 Turn on the ignition and check that the ABS warning light on the facia goes out.

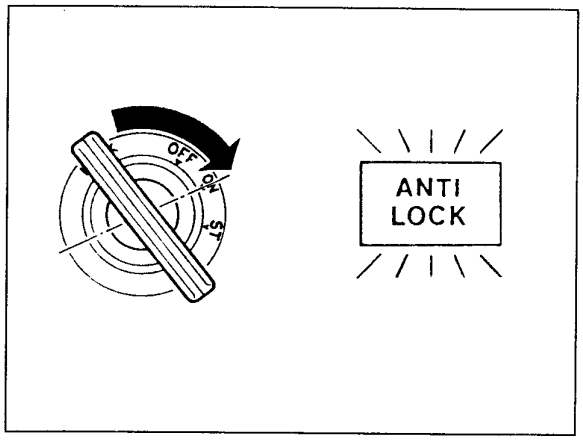

## Bleeding, manual method

1 Undo the connector from the ECU.

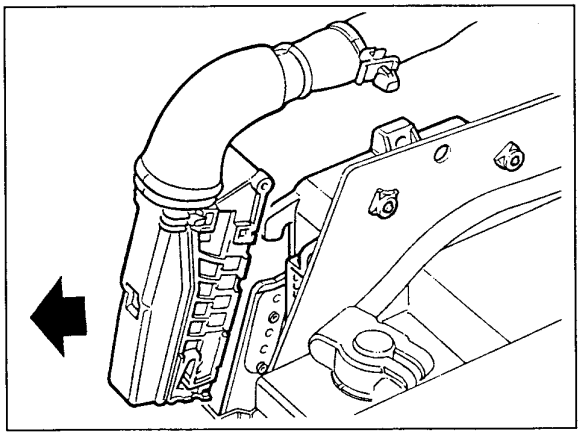

2 Connect the breakout box to the connector of the control module.

Connect wiring looms 1 (pins 1, 34 and 35) and 2 (pins 18, 36, 21 and 2) (part no. 86 11 212).

Connect pin 1 when the ignition is switched on. Run the pump for one minute. Connect the crocodile clip twenty seconds after the pump has started up so that the outlet valves are opened. Disconnect the crocodile clip after a further twenty seconds.

Disconnect pin 1 sixty seconds after the pump has started up.

Switch off the ignition.

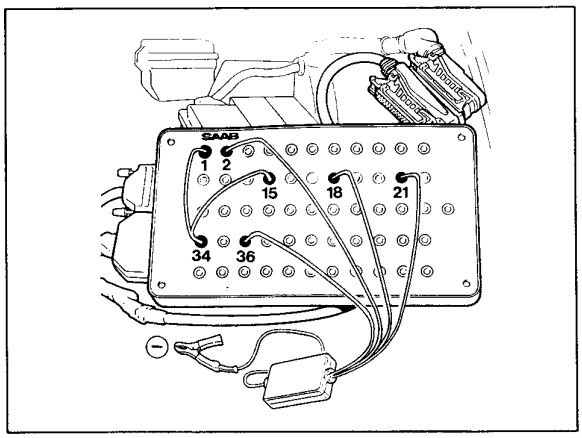


3 Connect the bleed hose to the bleed valve.

Ask someone to help by pressing the brake pedal at least ten times per brake caliper until brake fluid free of air bubbles is visible through the transparent hose.
Check the fluid level in the brake fluid reservoir to make sure the reservoir is not drained. Bleeding will not be possible until the bleed nipple has been opened.

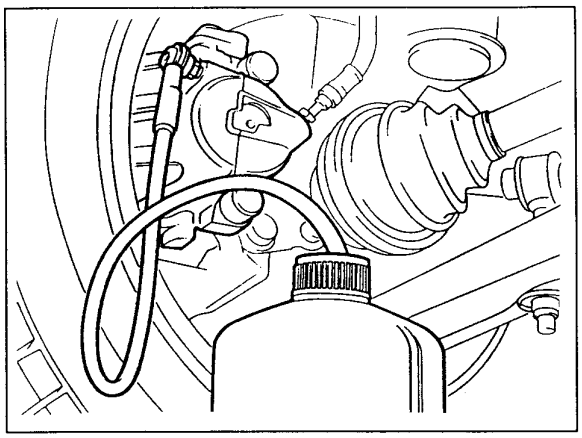

Bleeding must be carried out in the following sequence:

right-hand front wheel, left-hand rear wheel, left-hand front wheel and right-hand rear wheel.

When changing the brake fluid, the contents of the brake fluid reservoir must be siphoned off and each brake caliper must be drained of the amount of fluid indicated in the figure.

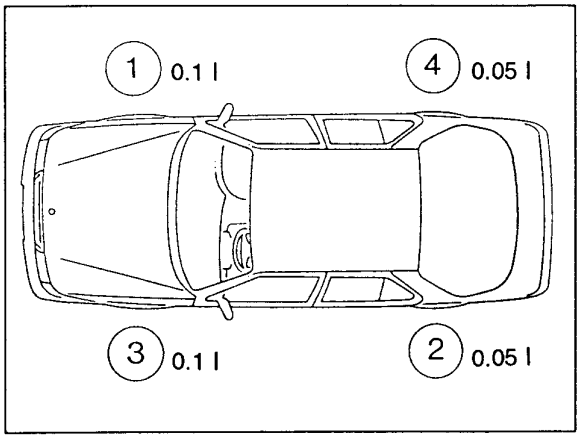

4 Plug in the connector of the ECU.

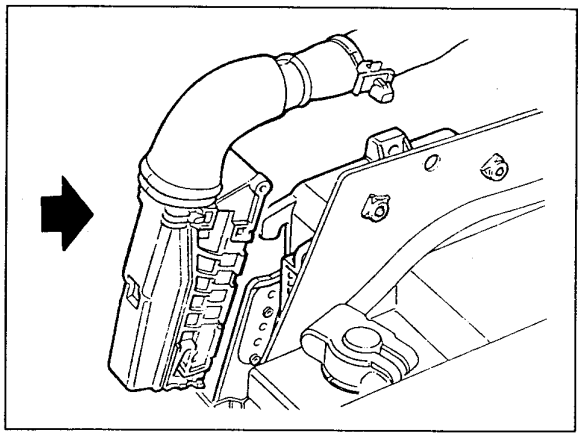

5 Turn on the ignition and check that the ABS warning light on the facia goes out.

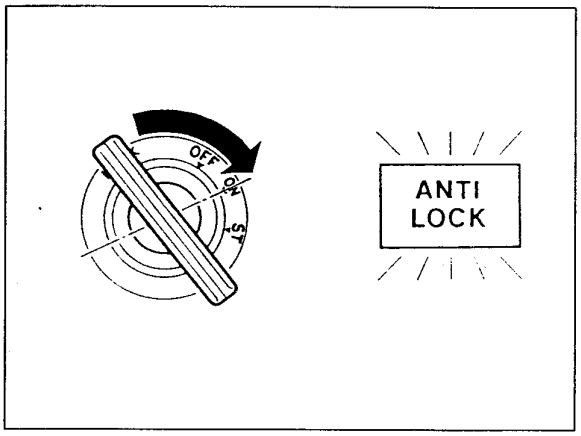

# Bleeding the brake system

## Bleeding with the brake bleeder unit

1 Unscrew the cover of the brake fluid reservoir.

Connect a topping-up bottle to the topping-up fitting (supplied in brake bleeding unit kit part no. 88 19 096) and clamp the topping-up fitting onto the brake fluid reservoir to eliminate the risk of the reservoir being drained.

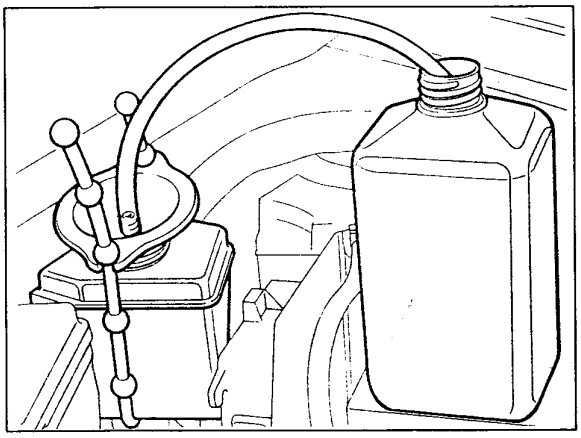

2 Bleed the system using the bleeder unit (part no. 88 19 096).

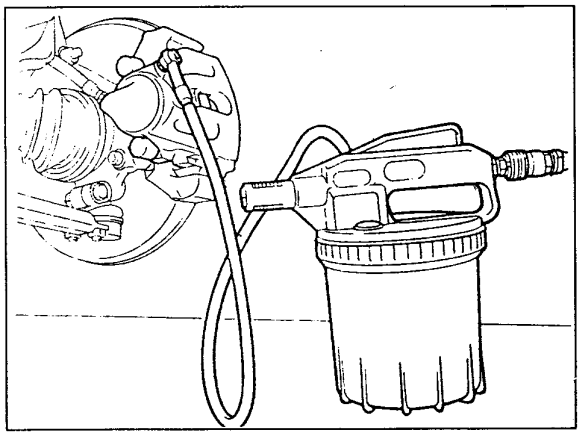

Bleeding must be carried out in the following sequence: right-hand front wheel, left-hand rear wheel, left-hand front wheel and right-hand rear wheel.

When changing the brake fluid, the contents of the brake fluid reservoir must be siphoned off and each brake caliper must be drained of the amount of fluid indicated in the figure.

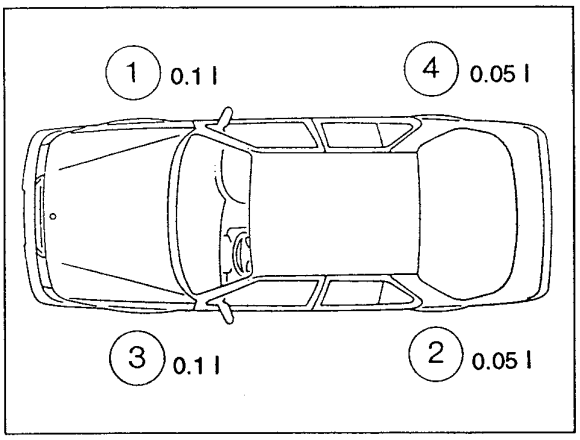

3 Turn on the ignition and check that the ABS warning light on the facia goes out.

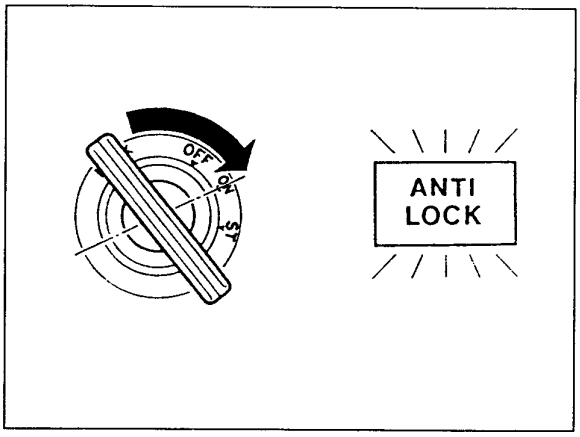


## Bleeding, manual method

1 Connect the bleed hose to the bleed valve.

Have a helper press the brake pedal at least ten times per brake caliper until brake fluid free of air bubbles is visible through the transparent hose. Bleeding will not be possible until the bleed nipple has been opened.

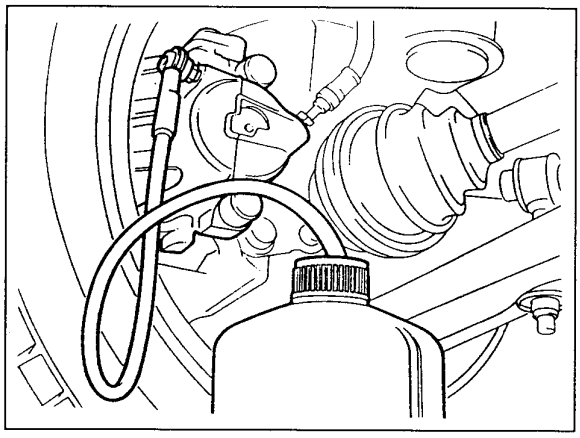

Bleeding must be carried out in the following sequence:

right-hand front wheel, left-hand rear wheel, left-hand front wheel and right-hand rear wheel.

When changing the brake fluid, the contents of the brake fluid reservoir must be siphoned off and each brake caliper must be drained of the amount of fluid indicated in the figure.
Check the fluid level in the brake fluid reservoir to make sure the reservoir is not drained.

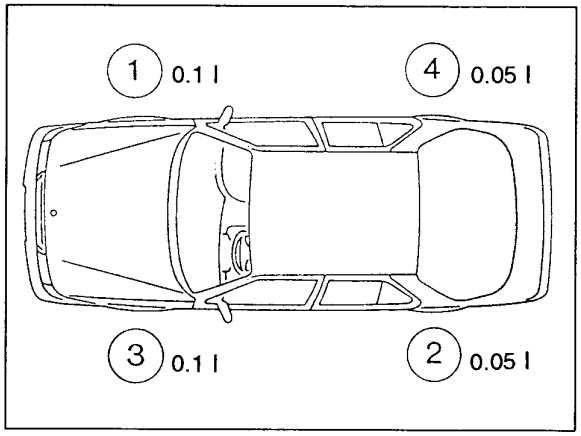


2 Turn on the ignition and check that the ABS warning light on the facia goes out.

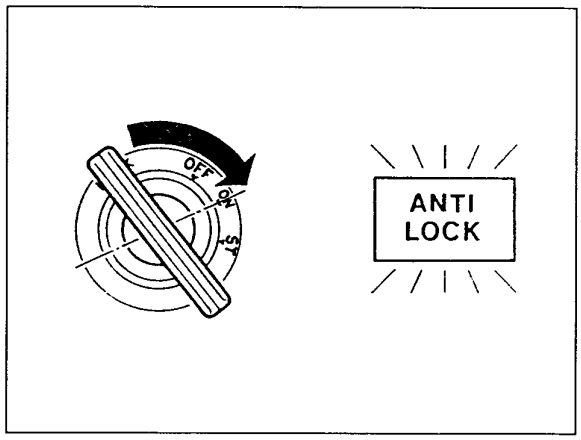

# Changing the brake fluid

All brake fluid deteriorates after a time through oxidation and absorption of water. This lowers the boiling point of the fluid, which may therefore vaporize during prolonged hard braking. The result can be sudden brake failure. It is therefore essential to ensure that the brake fluid is changed regularly at the specified intervals.

**Note**

To avoid possible brake failure, old brake fluid must be drained from the system.

1 Siphon off the fluid from the reservoir (use the bleeder unit, part no. 88 19 096). Note that it will not be possible to empty the reservoir completely.

2 Top up with DOT 4 brake fluid.

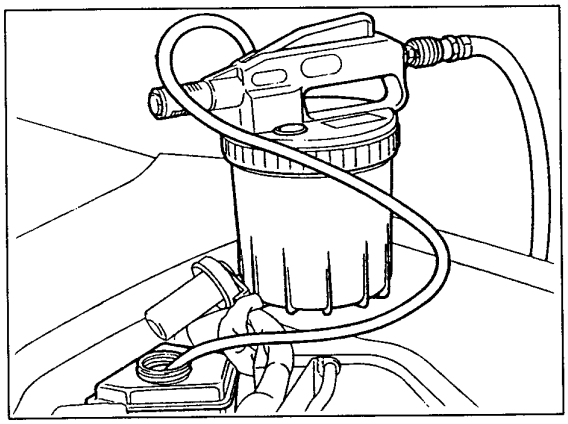

3 Use the bleeder unit for draining each individual wheel.

The following quantities must be drained from each wheel:

- Right-hand front wheel: 1.0 dl
- Left-hand rear wheel: 0.5 dl
- Left-hand front wheel: 1.0 dl
- Right-hand rear wheel: 0.5 dl

4 Fill the system with new brake fluid to bring the level up to the MAX mark on the side of the reservoir. Also change the fluid in the clutch system.

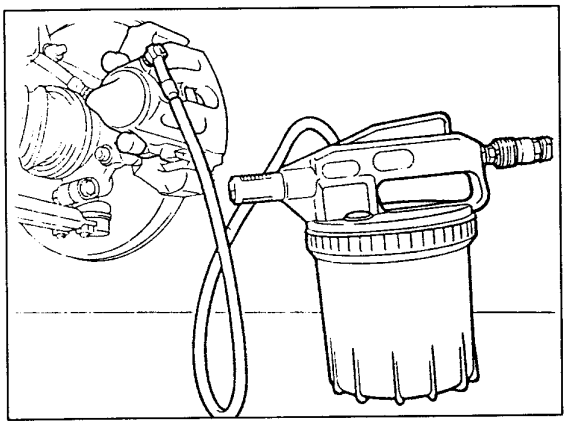

# ABS Mk IV fault-tracing

**Some important points to remember** . . . 590-1
**Fault-tracing on the ABS system** . . . . . 590-2
**ABS trouble codes** . . . . . 590-3
**ABS command codes** . . . . . 590-4
**ABS ECU connections, measured data** . . 590-5
**ABS fault-diagnosis routines** . . . . . 590-8
**Input signals** . . . . . 590-36
**Output signals**. . . . . 590-43

## Some important points to remember

**Note**

If system faults develop, the main relay switches off all power supply to the ECU and valves.

1 The diagnostic socket, which is green, is located under the right-hand front seat.

2 The ignition key must always be in the Drive position when diagnostic work is being carried out.

3 The ABS system has system number 3 in the ISAT.

4 Read and note all stored trouble codes before disconnecting the battery or ECU.

5 If it is not possible to establish a connection between the ISAT and the ECU, first check the wires between pins 23 and 42 of the ECU and the diagnostic socket (348). Check also that the supply current and earth are present in the diagnostic socket and that the pins of the connector are not damaged.

6 The actual diagnosis has been completed when the contents of the system's fault memory have been transferred to and stored in the ISAT. The faults are now available in the form of five-figure trouble codes, after which fault-tracing work can be continued according to the fault-diagnosis routine for the system concerned.

7 To avoid the risk of damaging the ECU, always check that the ignition is turned off before removing the connector.

8 When carrying out fault-tracing work on the vehicle's electronic systems, it is advisable to check first that the earth connection of the ECU concerned is good and that all the supply voltages are correct.

9 Remove the connectors and check that the connections and pins are undamaged. Replace the connectors and delete all trouble codes. Start/drive the car again and check whether the fault(s) persist(s).

10 When it is first detected, each fault is given an trouble code corresponding to a continuous fault. If the fault disappears again, the fault is given an intermittent trouble code instead.

11 All signals around the 12 V level are proportional to battery voltage, and the levels are therefore only to be used as a guide.

12 0 V signals designate earth, but on a sensitive multimeter may produce a reading slightly above 0 V.

**Note**

If command codes are used as a check at the same time as the car is being driven, remember that contact between the ISAT and the ECU will be broken when the car is driven at a speed above 20 km/h.

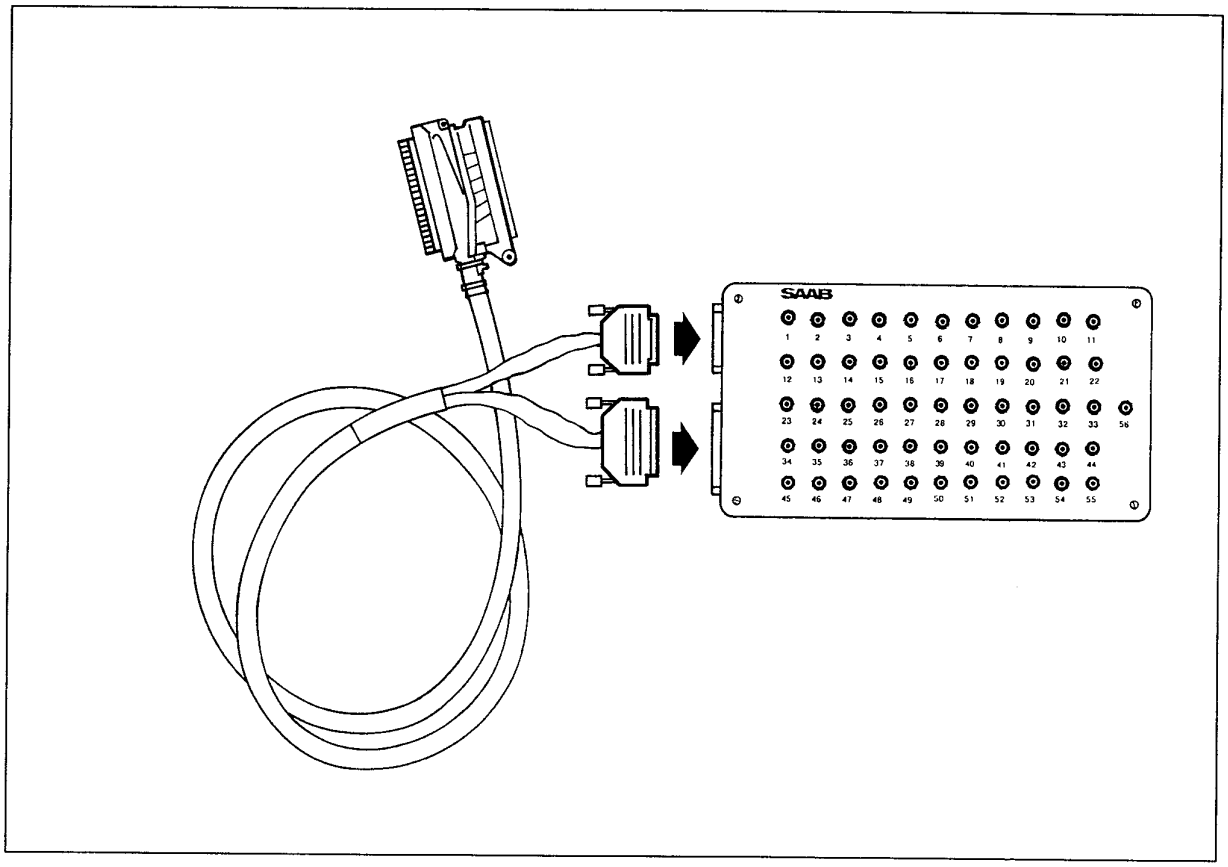


## Fault-tracing on the ABS system

As the pins on the connector of the ECU are sealed on the connection side, it is not possible to carry out measurements in the usual way during fault-tracing.

Breakout box 86 11 006 with wiring 86 11 030, which is connected between the connector and ECU and brings the measuring points out to numbered sockets for convenient measurement, is used instead.

All measurements on the system are performed with the breakout box connected.

**WARNING**

It is absolutely prohibited to use the breakout box when driving the car. Remember that the brake system is a safety system!

## ABS trouble codes

| Continuous | Intermittent | Component/Signal | See page |
|---|---|---|---|
| | 775B1 | ECU fault | 26 |
| | 775B2 | ECU fault, RAM | 27 |
| 42251 | 22251 | System relay, defective | 8 |
| 44221 | 24221 | No signal from front left wheel sensor | 10 |
| 44222 | 24222 | No signal from right front wheel sensor | 12 |
| 44223 | 24223 | No signal from left rear wheel sensor | 14 |
| 44224 | 24224 | No signal from right rear wheel sensor | 16 |
| | 2422A | Incorrect signal from left front wheel sensor (>40 km/h) | 10 |
| | 2422B | Incorrect signal from right front wheel sensor (>40 km/h) | 12 |
| | 2422C | Incorrect signal from left rear wheel sensor (>40 km/h) | 14 |
| | 2422D | Incorrect signal from right rear wheel sensor (>40 km/h) | 16 |
| | 24291 | Incorrect signal from left front wheel sensor (<40 km/h) | 10 |
| | 24292 | Incorrect signal from right front wheel sensor (<40 km/h> | 12 |
| | 24293 | Incorrect signal from left rear wheel sensor (<40 km/h) | 14 |
| | 24294 | Incorrect signal from right rear wheel sensor (<40 km/h) | 16 |
| | 24251 | Incorrect signal from left front wheel sensor (compare wheel speed) | 10 |
| | 24252 | Incorrect signal from right front wheel sensor (compare wheel speed) | 12 |
| | 24253 | Incorrect signal from left rear wheel sensor (compare wheel speed) | 14 |
| | 24254 | Incorrect signal from right rear wheel sensor (compare wheel speed) | 16 |
| 53421 | 33421 | Left front inlet valve inoperative | 18 |
| 53422 | 33422 | Left front outlet valve inoperative | 19 |
| 53423 | 33423 | Right front inlet valve inoperative | 20 |
| 53424 | 33424 | Right front outlet valve inoperative | 21 |
| 53425 | 33425 | Left rear inlet valve inoperative | 22 |
| 53426 | 33426 | Left rear outlet valve inoperative | 23 |
| 53427 | 33427 | Right rear inlet valve inoperative | 24 |
| 53428 | 33428 | Right rear outlet valve inoperative | 25 |
| | 334B1 | Left front outlet valve, hydraulic fault | 19 |
| | 334B2 | Right front outlet valve, hydraulic fault | 21 |
| | 334B3 | Left rear outlet valve, hydraulic fault | 23 |
| | 334B4 | Right rear outlet valve, hydraulic fault | 25 |
| 45721 | 25721 | Travel sensor fault | 31 |
| | 24791 | Pump fault. Does not operate despite control signal | 32 |
| 44792 | 24792 | Pump fault. Operates without control signal | 33 |
| E75B1 | | Hydraulic fault | 34 |

## ABS command codes

| Code | Function/component | Display text |
|---|---|---|
| 100 | Reads all stored trouble codes | |
| 201 | Travel sensor | 8B X00 (X = 1-7) |
| 202 | Brake light switch | 8B 000/100 (100 = Closed, 000 = Open) |
| 259 | Left front wheel speed | 8B 0XX (XX = km/h) |
| 25A | Right front wheel speed | 8B 0XX |
| 25B | Left rear wheel speed | 8B 0XX |
| 25C | Right rear wheel speed | 8B 0XX |
| 800 | Communication completed | |
| 900 | Clear all trouble codes | 11111 |

## ABS ECU pins, measured data (via breakout box)

| Pin no. | Wire colour | Component/function | Input | Output | Voltage (V) | Remarks |
|---|---|---|---|---|---|---|
| 1 | BK | Earth 1 | X | | 0 | G 15 |
| 2 | YE/RD | Left front outlet valve | | X | Pwm neg | Ref 12V |
| 3 | GN/RD | REF voltage | X | | Batt. | |
| 4 | | | | | | Not connected |
| 5 | | | | | | Not connected |
| 6 | | | | | | Not connected |
| 7 | | | | | | Not connected |
| 8 | | | | | | Not connected |
| 9 | GN | ASR right rear | | X | | To ASR |
| 10 | YE | ASR left front | | X | | To ASR |
| 11 | BU | ASR right front | | X | | To ASR |
| 12 | GY | ASR left rear | | X | | To ASR |
| 13 | | | | | | Not connected |
| 14 | | | | | | Not connected |
| 15 | BU | Pump relay Pin 85 | | X | 0v | Relay earth Ref 12V (off) |
| 16 | BU | Travel sensor | X | | 1-10V | Depending on position |
| 17 | | | | | | Not connected |
| 18 | BN/RD | Right rear outlet valve | | X | Pwm neg | Ref 12V |
| 19 | BK | Earth 2 | X | | 0 | G 15 |
| 20 | GN/WH | Left front inlet valve | | X | Pwm neg | Ref 12V |
| 21 | BU/RD | Right front outlet valve | | X | Pwm neg | Ref 12V |
| 22 | | | | | | Not connected |
| 23 | YE | Diagnostic lead L | X | | | Pin 4 |
| 24 | | | | | | Not connected |
| 25 | | | | | | Not connected |
| 26 | | | | | | Not connected |

| Pin no. | Wire colour | Component/function | In-put | Out-put | Voltage (V) | Remarks |
|---|---|---|---|---|---|---|
| 27 | BK/GN | Right rear wheel sensor | | X | 0V | Ref earth |
| 28 | YE/GN | Left front wheel sensor | | X | 0V | Ref earth |
| 29 | BU/GN | Right front wheel sensor | | X | 0V | Ref earth |
| 30 | GN/GY | Left front wheel sensor | | X | 0V | Ref earth |
| 31 | BK | Pump sensor | | X | approx. 0.7 AC | Active |
| 32 | BU | Brake light switch | X | | 12V | 0V off |
| 33 | YE | Power supply +30 | X | | 12 V | Via main relay |
| 34 | GN | Main relay earth | | X | 0V | Ref 12V Pin 85 |
| 35 | | | | | | Not connected |
| 36 | BU/WH | Left rear outlet valve | | X | Pwm neg | Ref 12V |
| 37 | | | | | | Not connected |
| 38 | RD/WH | Right front inlet valve | | X | Pwm neg | Ref 12V |
| 39 | | | | | | No connection activated |
| 40 | | | | | | Not connected |
| 41 | GN | Travel sensor | | X | 0V | Earth |
| 42 | BU | Diagnostic lead K | | X | | Pin 1 |
| 43 | | | | | | Not connected |
| 44 | | | | | | Not connected |
| 45 | GN | Right rear wheel sensor | X | | 0.15-0.70 | AC sine wave |
| 46 | GN | Left rear wheel sensor | X | | 0.15-0.70 | AC sine wave |
| 47 | GN | Right front wheel sensor | X | | 0.15-0.70 | AC sine wave |
| 48 | GN | Left front wheel sensor | X | | 0.15-0.70 | AC sine wave |
| 49 | WH | Pump sensor | X | | approx. 0.7 AC | Signal |
| 50 | | | | | | Not connected |
| 51 | | | | | | Not connected |

| Pin no. | Wire colour | Component/function | In-put | Out-put | Voltage (V) | Remarks |
|---|---|---|---|---|---|---|
| 52 | WH | ANTI LOCK warning light earth | | X | 0V | Ref 12V off |
| 53 | RD | Power supply +54 | X | | 12v | +54 |
| 54 | BN/WH | Left rear inlet valve | | X | Pwm neg | Ref 12V |
| 55 | GY/RD | Right rear inlet valve | | X | Pwm neg | Ref 12V |

# ABS fault-diagnosis routines

## Trouble codes 4/22251

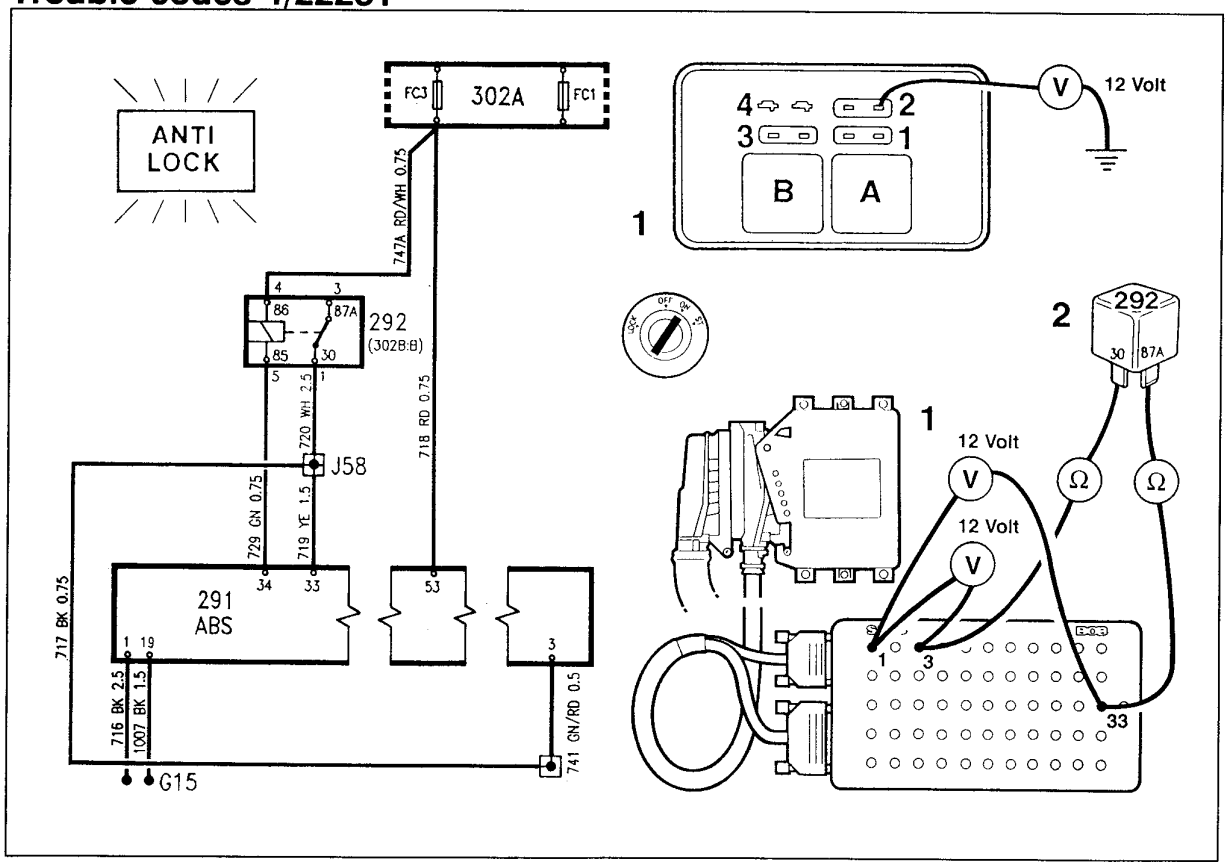


## Cause of fault

The fault may be caused by the following:

- break in continuity/short-circuit in any of the +30 power supply circuits via the main relay, pins 3 and 33
- break in continuity/short-circuit to +12 V in the control circuit, pin 34

  Activated = 0 Volts
  Non-activated = 12 Volts
- break in continuity in the circuit for +54 supply to pin 53
- short-circuit to earth in the circuit for +54 supply to pin 53 (ABS 10A fuse has blown)

**Note**

The following faults do not trigger any trouble code and no contact can be established between the ISAT and the system.

The warning light is lit.

## Symptom

The ANTI LOCK light is lit

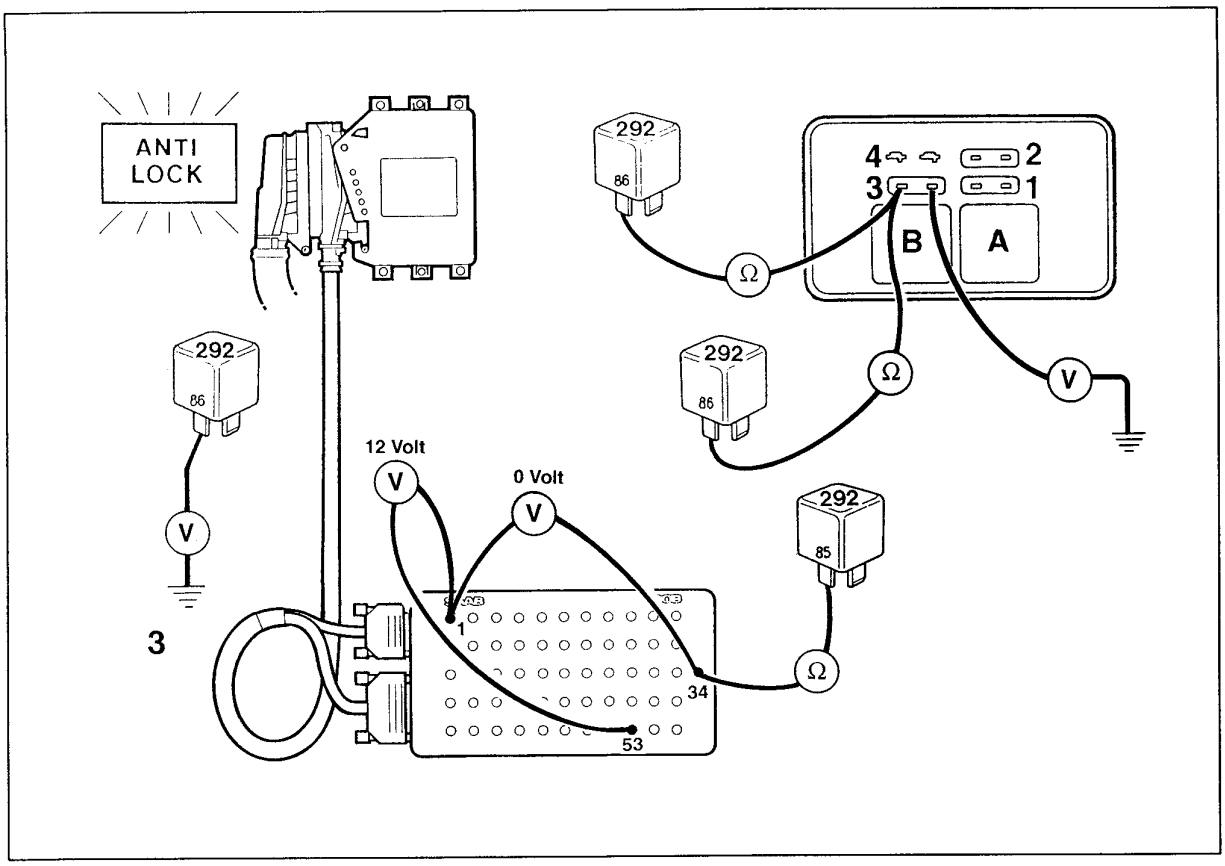


## Action

**Note**

If there is any other trouble code in addition to trouble code 42251, this must be dealt with first. All measurements are to be carried out using the breakout box (part No. 86 11 006) connected between the connector and the ECU (see page 590-2).

1 With the ignition switch in the Drive position, check that there is battery voltage at pins 3 and 33.

If there is no voltage at either pin, check the ABS 30A fuse for the +30 supply in the main fuse box on the bulkhead and the red wire from the fuse to the main relay and to the distribution block on the battery tray.

2 If there is no voltage at any of the pins, check the wire from the ECU to the main relay from the pin concerned.

3 With 0 Volts on pin 34 and no voltage at pins 3 and 33, check that the 10 A fuse (ABS) is intact.

a. If the fuse is intact, check the power supply to pin 53.

If there is no voltage, continue from step e).

b. If there is voltage at pin 53, check the green wire between pin 85 of the system relay and pin 34 of the ECU.

c. Check that there is voltage at pin 86 of the system relay. If not, continue from f).

d. If there is voltage, try a new system relay.

e. If there is no voltage at pin 53 either, check the red and white wire as far as the fuse. Also check that power is supplied from pin 54 of the ignition switch in the grey and white wire as far as the supply side of the ABS fuse.

f. Check the red and white wire between 86 on the system relay via the pump relay to the 10 A fuse.

4 If there is battery voltage on pin 34 but no voltage on pins 3 and 33, the control circuit is correct but the ECU has not earthed the circuit due to a different fault in the ABS system.

## Trouble codes 4/24221, 2422A, 24251, 24291

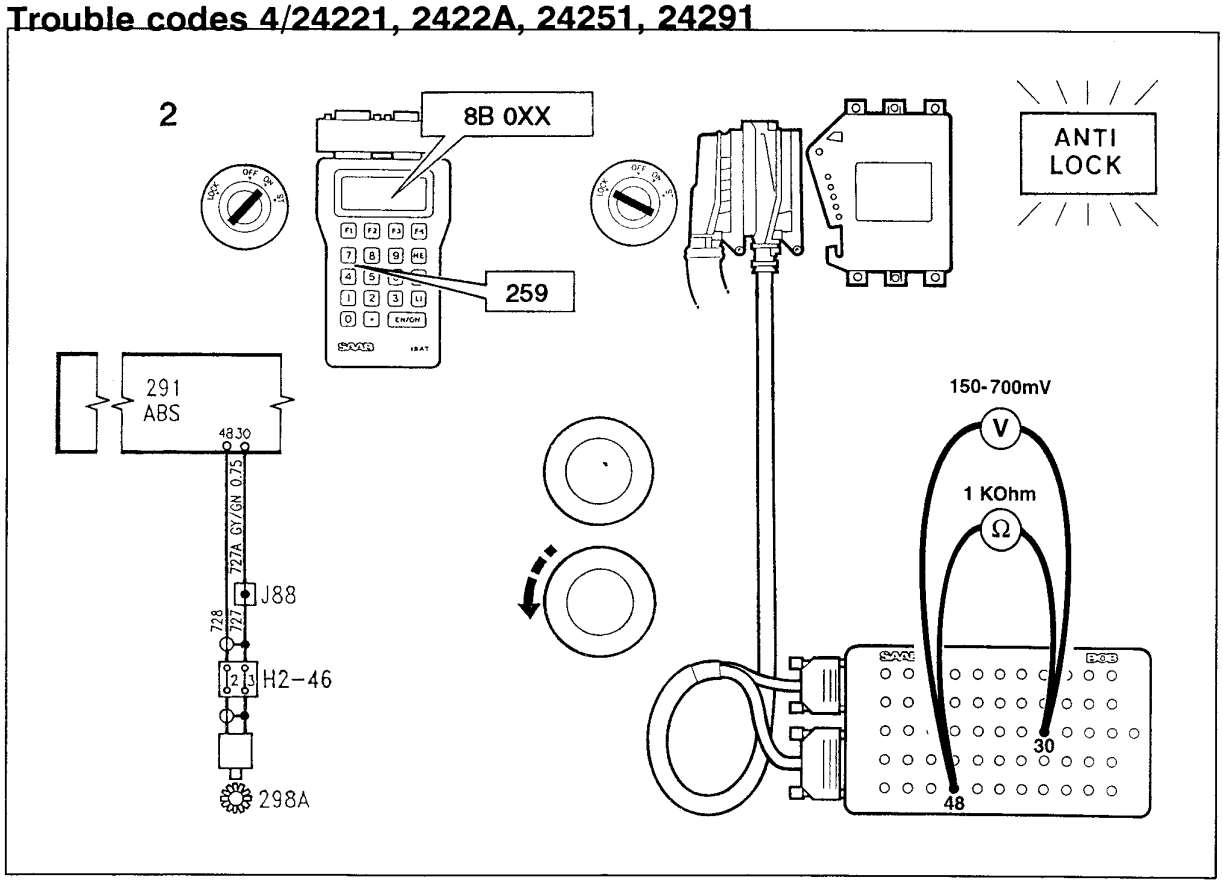


## Cause of fault

**Left front wheel sensor**

- defective sensor wheel, incorrect gap between sensor and sensor wheel, sensor not secured or incorrect bearing clearance in the wheel bearing.
- faulty sensor signal to ECU, break in continuity/ short- circuit in wires or winding.

## Symptom

The ANTI LOCK light is lit.

## Action

1 Raise the car.

2 With the ignition in the Drive position, enter command code 259 on the ISAT.

8B 0XX appears on the display (left front wheel speed) (XX = 0 - 20km/h)depending on whether the wheel is stationary or rotated by hand.

With a multimeter set to AC, take a reading of the signal across pins 30 and 48.

It should be between 150 and 700 mV (AC).

With the ignition turned off and the connector of the ECU removed, check the sensor winding for breaks in continuity by measuring the resistance between pins 30 and 48.

The resistance must be approx. 1 kohm.

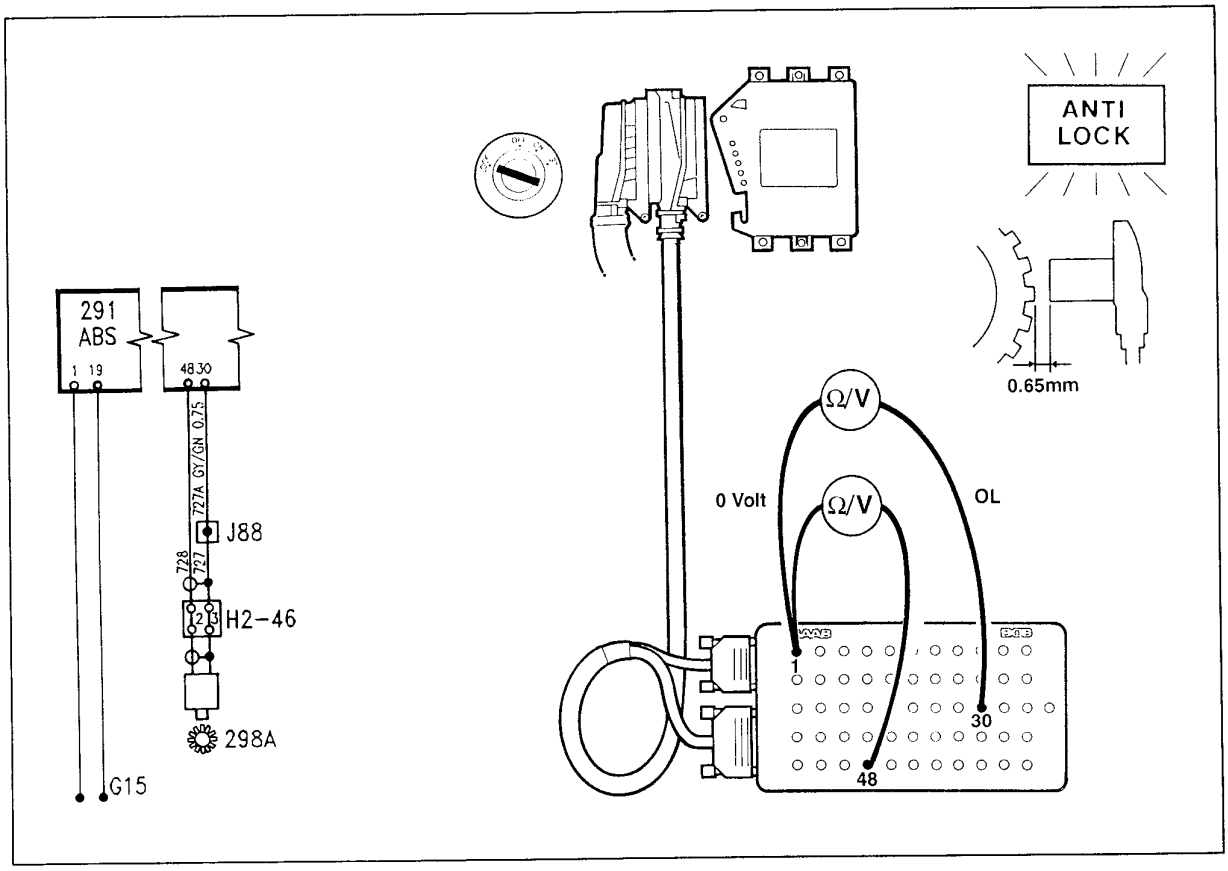


Also check the wires between the sensor and pins 30 and 48 of the ABS ECU for short-circuits and for poor contact in the connector.

Resistance to earth is measured as follows:

- between pin 30 and earth, correct value = OL
- between pin 48 and earth, correct value = OL

Voltage in the event of a short-circuit to +12 V is measured as follows:

- between pin 30 and earth, correct value = 0 Volts (DC)
- between pin 48 and earth, correct value = 0 Volts (DC)

3 Check that the left front wheel sensor is firmly in position.

4 Check that the sensor wheel is not damaged and is firmly in position. Check also that there is no bearing clearance.

5 Check the gap between the sensor and sensor wheel. The gap must be 0.65 mm.

6 Check that the ECU has a satisfactory earth connection at pin 1 and pin 19.

7 If no fault is discovered, test-drive the car and check whether the trouble code is triggered again. If so, see page 590-35

## Trouble codes 4/24222, 2422B, 24252, 24292

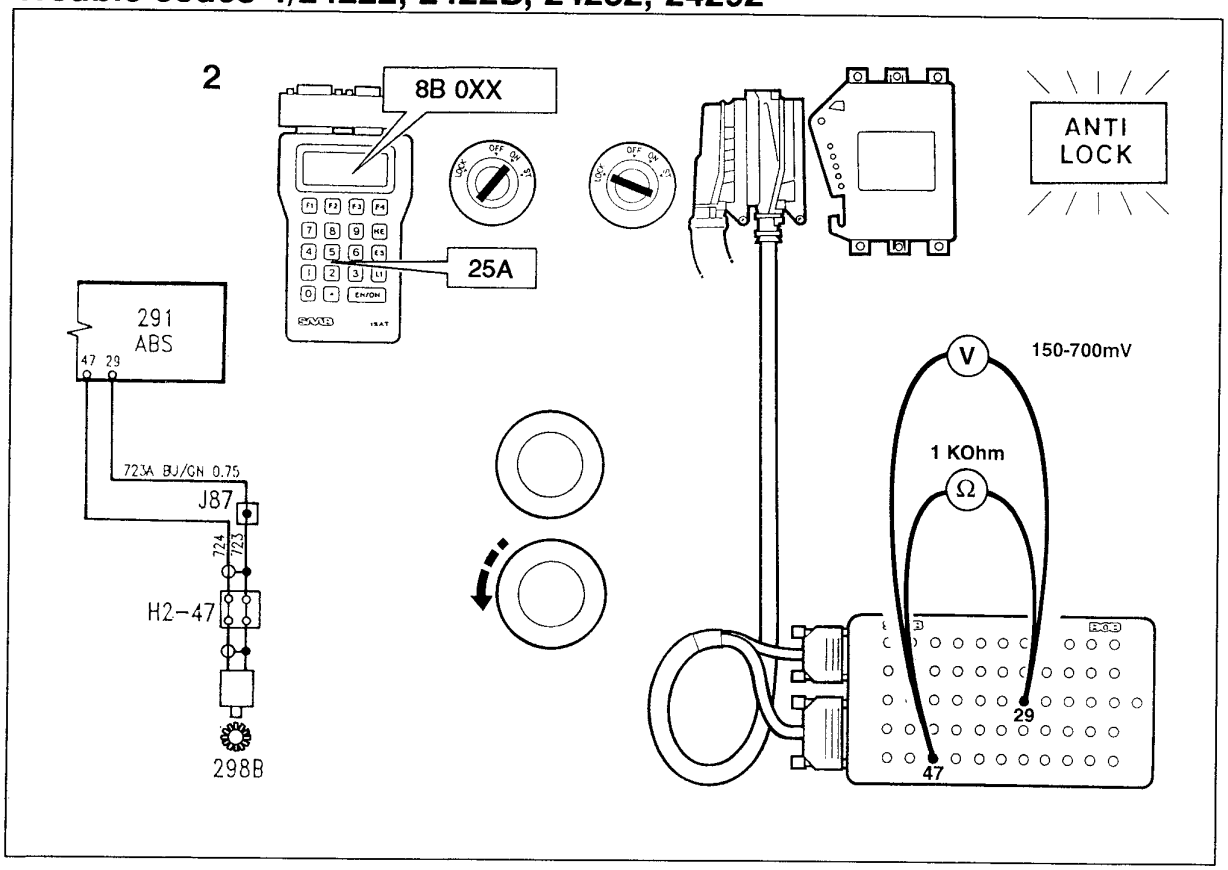


## Cause of fault

**Right front wheel sensor**

- defective sensor wheel, incorrect gap between sensor and sensor wheel, sensor not secured or incorrect bearing clearance in the wheel bearing.
- faulty sensor signal to ECU,
  break in continuity/short-circuit in wires or winding.

## Symptom

The ANTI LOCK light is lit.

## Action

1 Raise the car.

2 With the ignition switch in the Drive position, enter command code 25A on the ISAT.

8B 0XX appears on the display (right front wheel speed) (XX = 0 - 20km/h)depending on whether the wheel is stationary or rotated by hand.

With a multimeter set to AC, take a reading of the signal across pins 29 and 47. It should be between 150 and 700 mV (AC).

With the ignition turned off and the connector of the ECU removed, check the sensor winding for breaks in continuity by measuring the resistance between pins 29 and 47.

The resistance must be approx. 1 kohm.

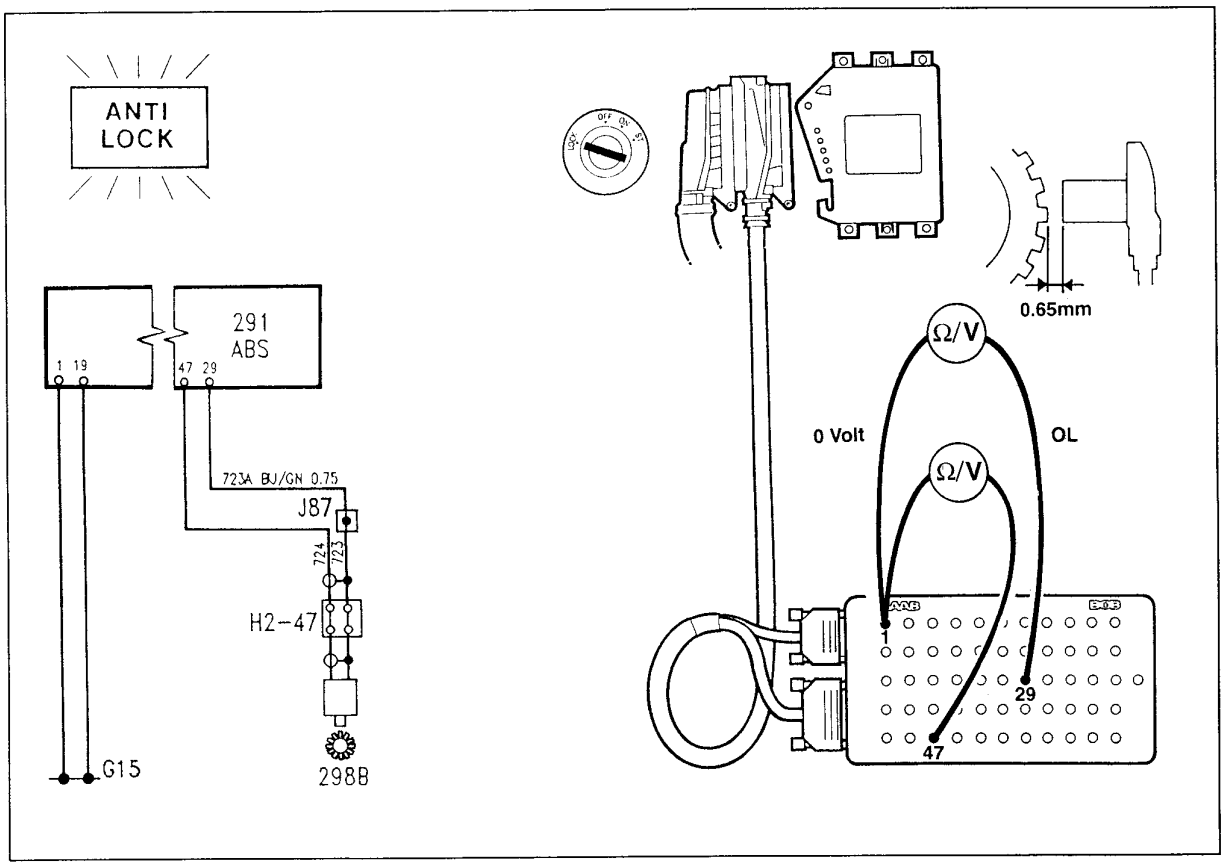


Also check the wires between the sensor and pins 29 and 47 of the ABS ECU for short-circuits and for poor contact in the connector.

Resistance in the event of a short-circuit to earth is measured as follows:

- between pin 29 and earth, correct value = OL
- between pin 47 and earth, correct value = OL

Voltage in the event of a short-circuit to +12 V is measured as follows:

- between pin 29 and earth, correct value = 0 Volts (DC)
- between pin 47 and earth, correct value = 0 Volts (DC)

3 Check that the right front wheel sensor is firmly in position.

4 Check that the sensor wheel is not damaged and is firmly in position.

Check also that there is no bearing clearance.

5 Check the gap between the sensor and sensor wheel.

The gap must be 0.65 mm.

6 Check that the ECU has a satisfactory earth connection at pin 1 and pin 19.

7 If no fault is discovered, test-drive the car and check whether the trouble code is triggered again. If so, see page 590-35

## Trouble codes 4/24223, 2422C, 24253, 24293

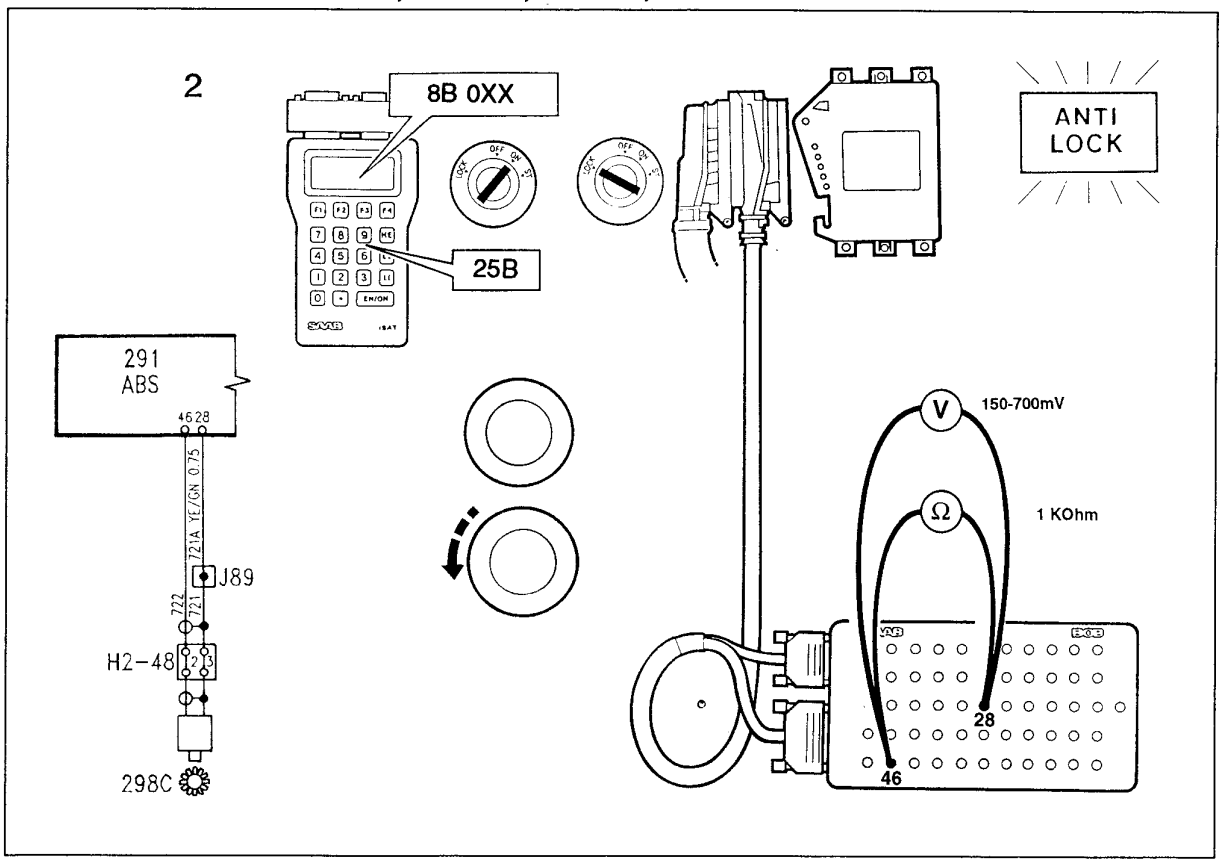


## Cause of fault

**Left rear wheel sensor**

- defective sensor wheel, incorrect gap between sensor and sensor wheel, sensor not secured or incorrect bearing clearance in the wheel bearing.
- faulty sensor signal to ECU, break in continuity/ short- circuit in wires or winding.

## Symptom

The ANTI LOCK light is lit.

## Action

1 Raise the car.

2 With the ignition switch in the Drive position, enter command code 25B on the ISAT.

8B 0XX appears on the display (left rear wheel speed) (XX = 0 - 20km/h)depending on whether the wheel is stationary or rotated by hand.

With a multimeter set to AC, take a reading of the signal across pins 28 and 46. It should be between 150 and 700 mV (AC).

3 With the ignition turned off and the connector of the ECU removed, check the sensor winding for breaks in continuity by measuring the resistance between pins 28 and 46.
The resistance should be approx. 1 kohm.

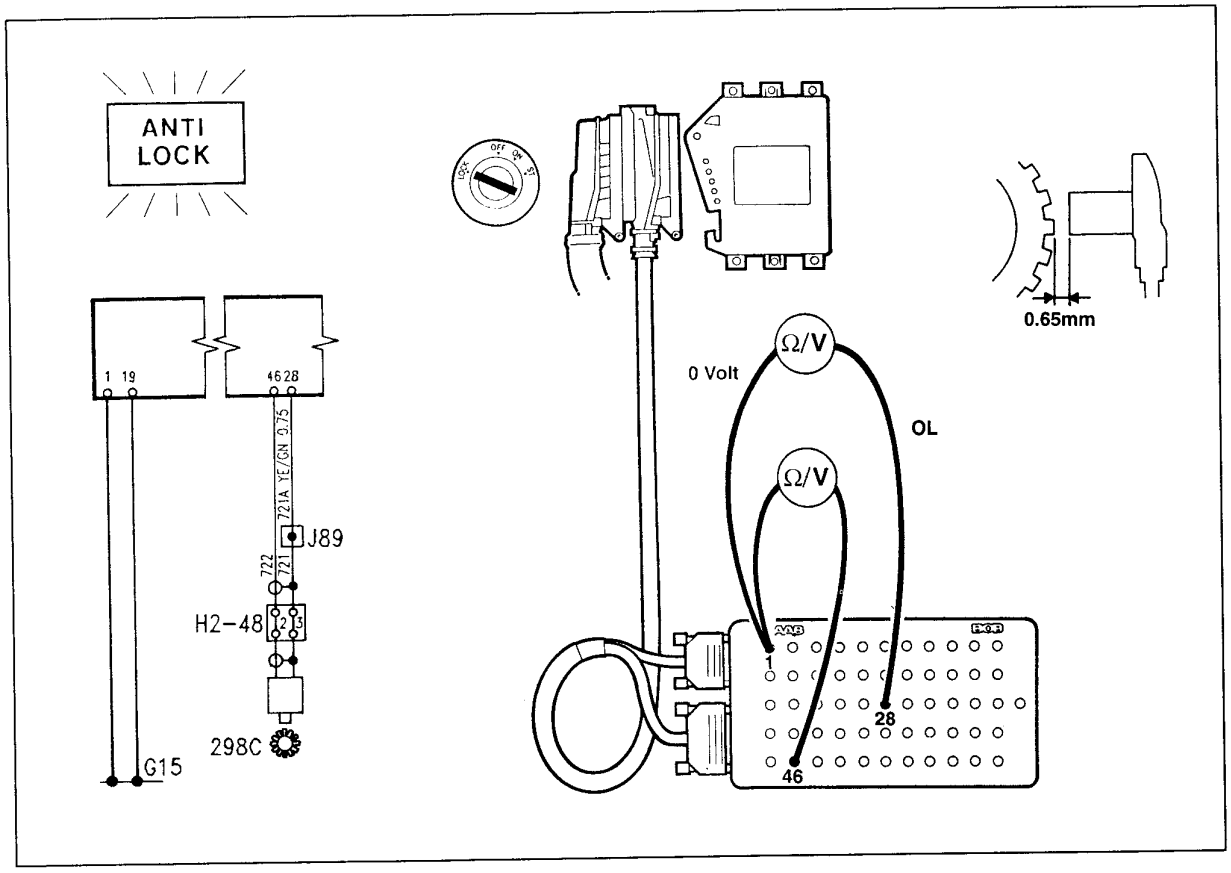


The resistance should be approx. 1 kohm.

Also check the wires between the sensor and pins 28 and 46 of the ABS ECU for short-circuits and for poor contact in the connector.

Resistance in the event of a short-circuit to earth is measured as follows:

- between pin 28 and earth, correct value = OL
- between pin 46 and earth, correct value = OL

Voltage in the event of a short-circuit to +12 V is measured as follows:

- between pin 28 and earth, correct value = 0 Volts (DC)
- between pin 46 and earth, correct value = 0 Volts (DC)

4 Check that the left rear wheel sensor is firmly in position.

5 Check that the sensor wheel is not damaged and is firmly in position. Check also that there is no bearing clearance.

6 Check the gap between the sensor and sensor wheel.

The gap must be 0.65 mm.

7 Check that the ECU has a satisfactory earth connection at pins 1 and 19.

8 If no fault is discovered, test-drive the car and check whether the trouble code is triggered again. If so, see page 590-35

## Trouble codes 4/24224, 2422D, 24254, 24294

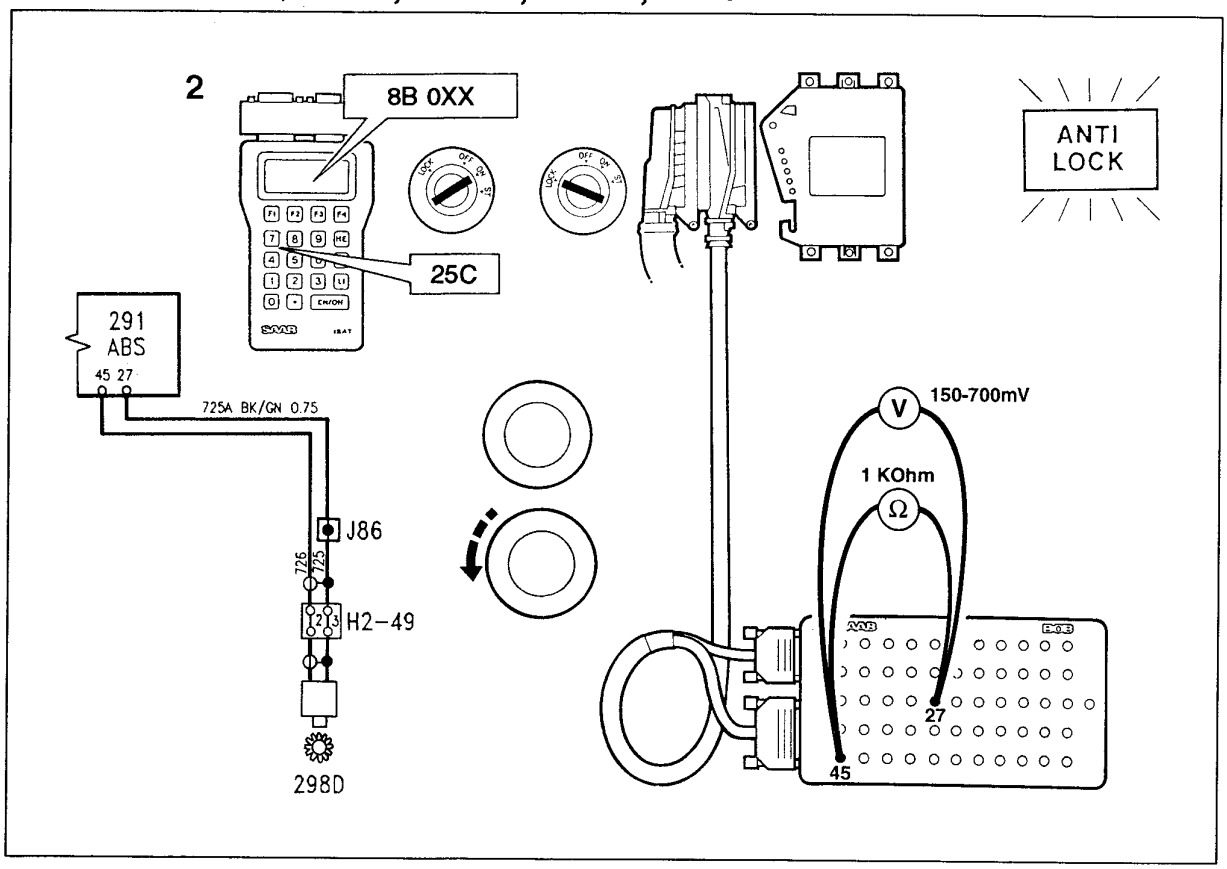


## Cause of fault

**Right rear wheel sensor**

- defective sensor wheel, incorrect gap between sensor and sensor wheel, sensor not secured or incorrect bearing clearance in the wheel bearing.
- faulty sensor signal to ECU, break in continuity/ short- circuit in wires or winding.

## Symptom

The ANTI LOCK light is lit.

## Action

1 Raise the car.

2 With the ignition switch in the Drive position, enter command code 25C on the ISAT.

8B 0XX appears on the display (right rear wheel speed) (XX = 0 - 20km/h)depending on whether the wheel is stationary or rotated by hand.

With a multimeter set to AC, take a reading of the signal across pins 27 and 45. It should be between 150 and 700 mV (AC).

3 With the ignition turned off and the connector of the ECU removed, check the sensor winding for breaks in continuity by measuring the resistance between pins 27 and 45.

The resistance should be approx. 1 kohm.

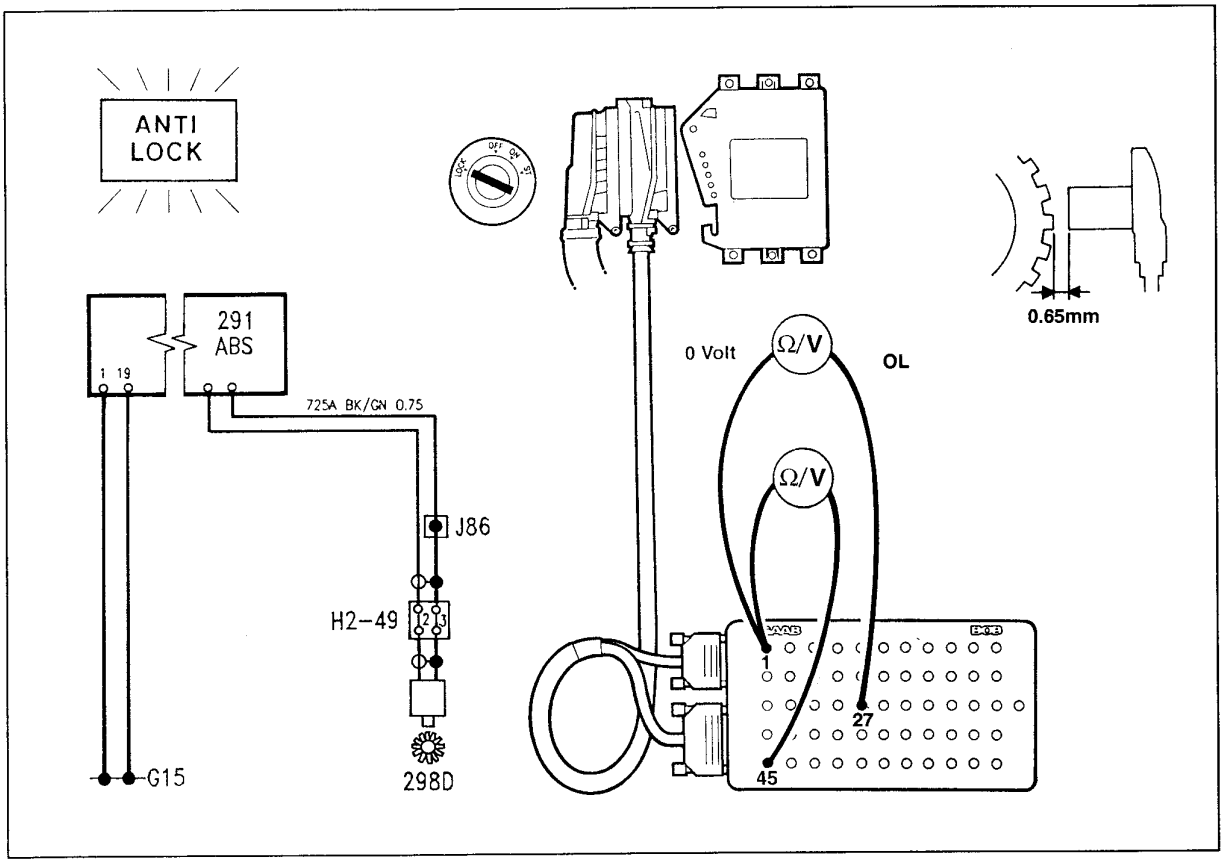


Also check the wires between the sensor and pins 27 and 45 of the ABS ECU for short-circuits and for poor contact in the connector. Resistance in the event of a short-circuit to earth is measured as follows:

- between pin 27 and earth, correct value = OL
- between pin 45 and earth, correct value = OL

Voltage in the event of a short-circuit to +12 V is measured as follows:

- between pin 27 and earth, correct value = 0 Volts (DC)
- between pin 45 and earth, correct value = 0 Volts (DC)

4 Check that the right rear wheel sensor is firmly in position.

5 Check that the sensor wheel is not damaged and is firmly in position. Check also that there is no bearing clearance.

6 Check the gap between the sensor and sensor wheel. The gap should be 0.65 mm.

7 Check that the ECU has a satisfactory earth connection at pins 1 and 19.

8 If no fault is discovered, test-drive the car and check whether the trouble code is triggered again. If so, see page 590-35

## Trouble code 5/33421

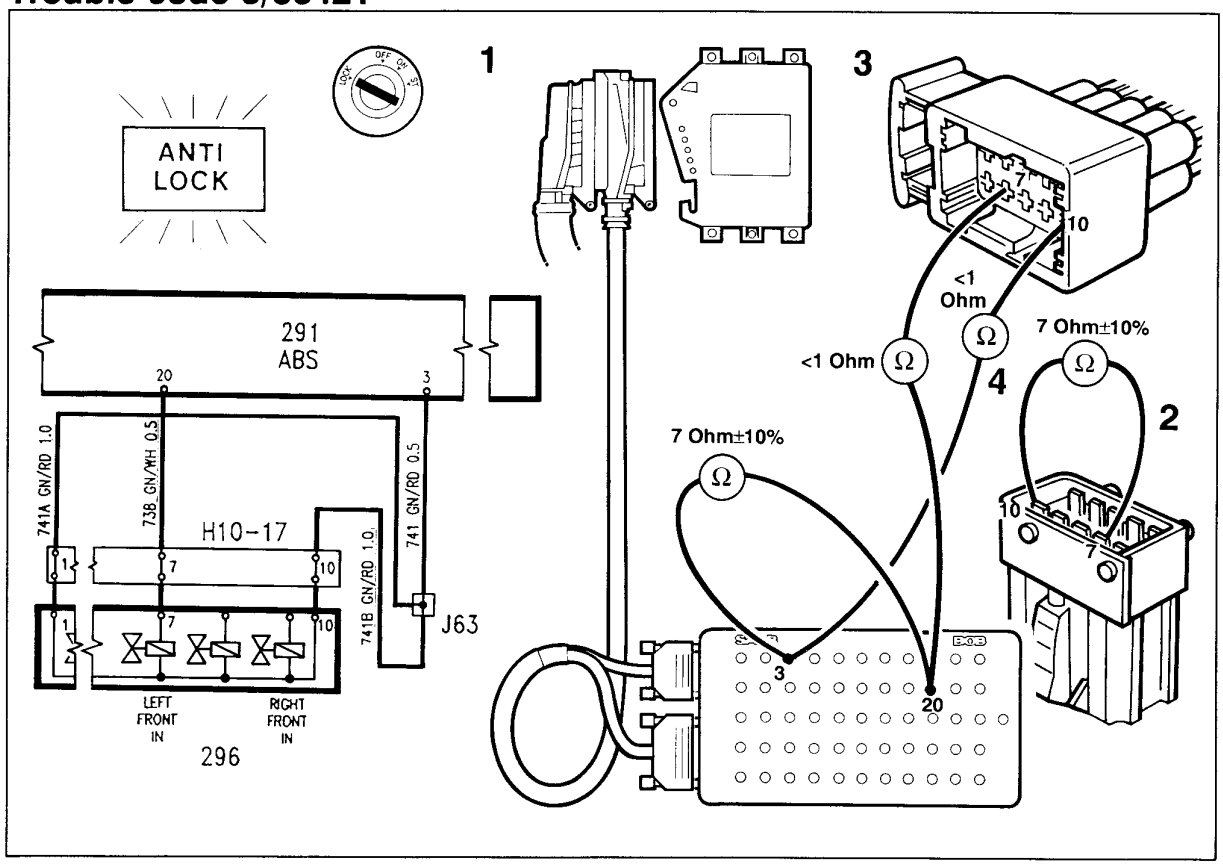


## Cause of fault

Defective left front inlet valve, break in continuity/ short- circuit to earth/ + 12 V in the wiring loom of the valve or defective ECU.

## Symptom

The ANTI LOCK light is lit.

## Action

1 With the ECU disconnected, check the circuit between pin 20 and pin 3 of the ABS ECU via the breakout box.

The resistance should be 7 Ohms ± 10%.

If the circuit is OK, clear the trouble code and test-drive the car to check whether the trouble code is triggered again. If so, see page 590-35.

If the circuit is defective, continue as follows:

2 Check that the winding of the IFL valve is intact by measuring the resistance between pins 7 and 10 or 1 on the valve body.

If the resistance is faulty, fit a new hydraulic unit. If the resistance is now correct, the fault is in the wiring harness, go to step no. 3.

3 Check the green and white wire between pin 7 on the connector of the valve housing and pin 20 on the ABS ECU for a break in continuity/ short-circuit.

4 Check the green and white wire between pin 10 or 1 on the connector of the valve housing and pin 3 on the ABS ECU for a break in continuity/ short-circuit.

## Trouble codes 5/33422, 334B1

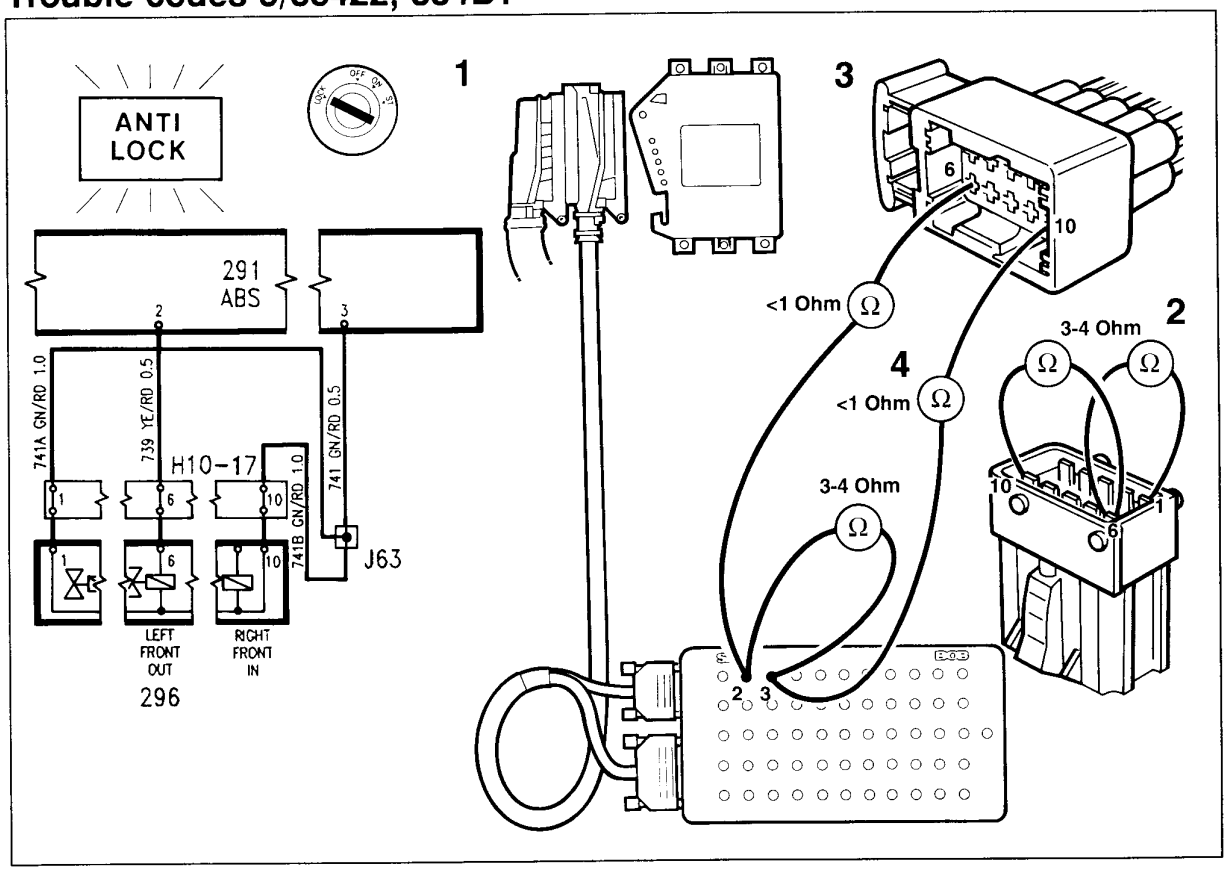


## Cause of fault

Defective left front outlet valve, break in continuity/ short- circuit to earth/ + 12 V in the wiring loom of the valve or defective ECU.

## Symptom

The ANTI LOCK light is lit.

## Action

1 With the ECU disconnected, check the circuit between pins 3 and 2 of the ABS ECU via the breakout box.

The resistance should be 3-4 ohms.

If the circuit is OK, clear the trouble code and test-drive the car to check whether the trouble code is triggered again. If so, see page 590-35.

If the circuit is defective, continue as follows:

2 Check that the winding of the OFL valve is intact by measuring the resistance between pins 6 and 10 or 1 of the valve body.

If the resistance is faulty, fit a new hydraulic unit. Resistance: 3-4 ohms. If the resistance is now correct, the fault is in the wiring harness, go to step no. 3.

3 Check the yellow and red wire between pin 6 on the connector of the valve housing and pin 2 on the ABS ECU for a break in continuity/ short- circuit.

4 Check the wire between pin 10 or 1 on the connector of the valve housing and pin 3 on the ABS ECU for a break in continuity/short-circuit.

## Trouble code 5/33423

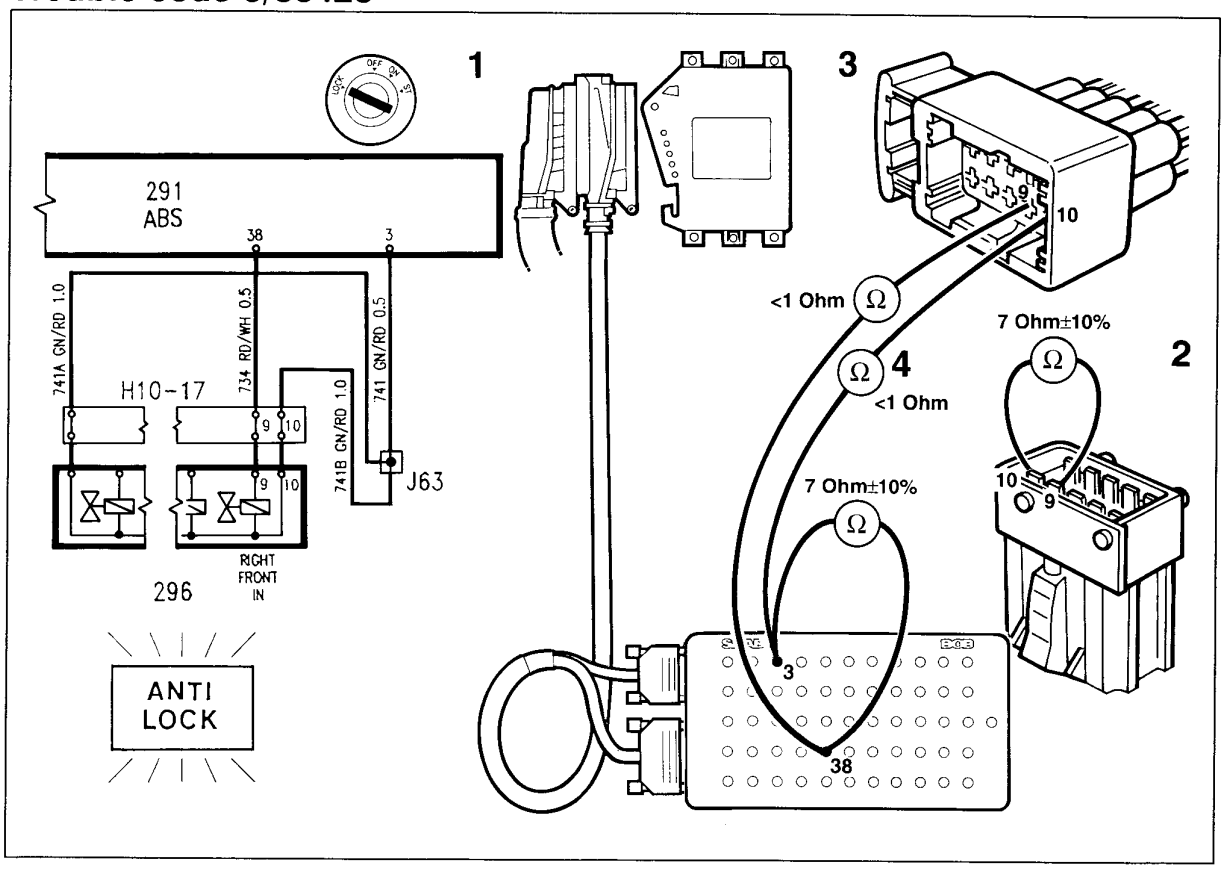


## Cause of fault

Defective right front inlet valve, break in continuity/ short- circuit to earth/+12 V in the wiring loom of the valve or defective ECU.

## Symptom

The ANTI LOCK light is lit.

## Action

1 With the ECU disconnected, check the circuit between pins 3 and 38 of the ABS ECU via the breakout box.

The resistance should be 7 ohms ± 10%.

If the circuit is OK, clear the trouble code and test-drive the car to check whether the trouble code is triggered again. If so, see page 590-35.

If the circuit is defective, continue as follows:

2 Check that the winding of the IFR valve is intact by measuring the resistance between pin 9 and pin 10 or 1 on the valve body.

If the resistance is incorrect, fit a new hydraulic unit. Resistance 7 ohms + 10%. If the resistance is now correct, the fault is in the wiring harness, go to step no. 3.

3 Check the red and white wire between pin 1 on the connector of the valve housing and pin 38 on the ABS ECU for a break in continuity/short-circuit.

4 Check the wire between pin 10 or 1 on the connector of the valve body and pin 3 on the ABS ECU for a break in continuity/short-circuit.

## Fault codes 5/33424, 334B2

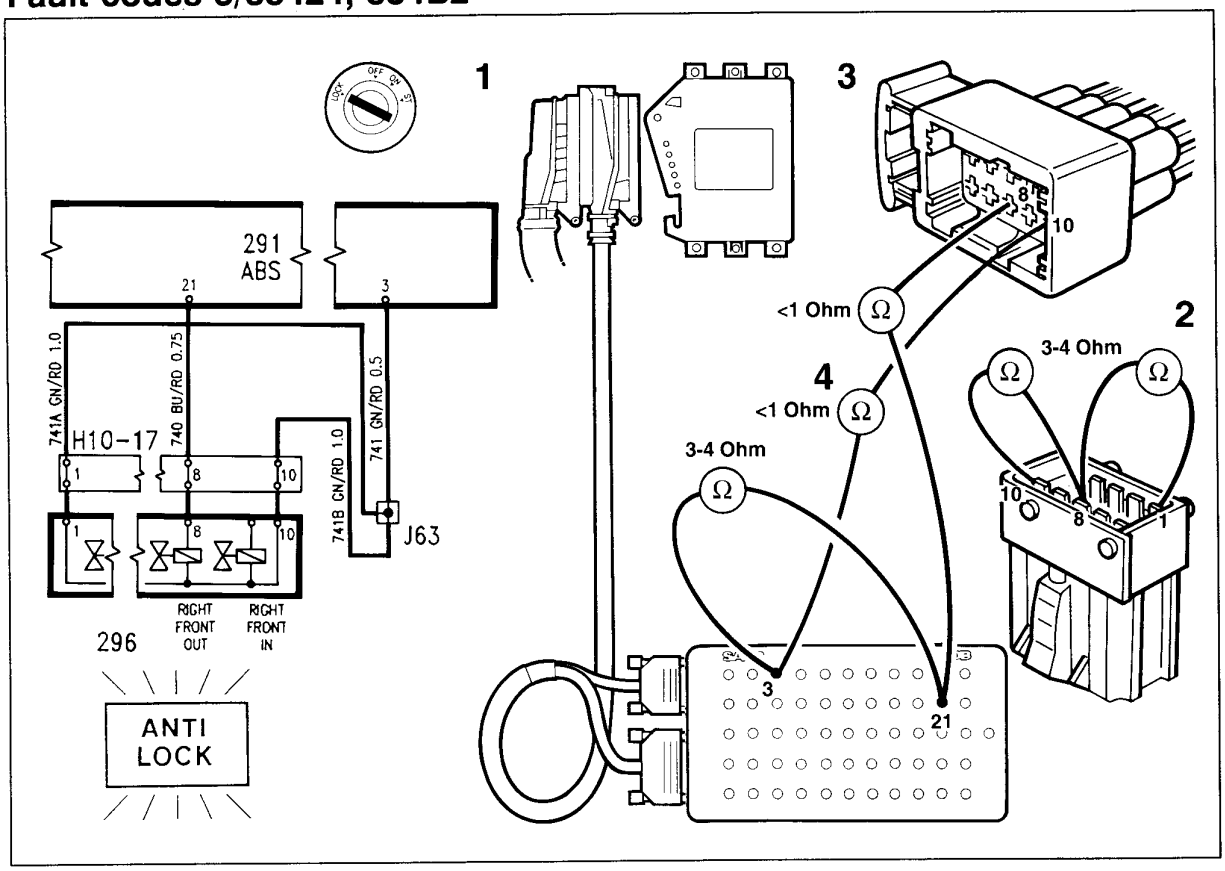


## Cause of fault

Defective right front outlet valve, break in continuity/short-circuit to earth/ + 12 V in the wiring loom of the valve or defective ECU.

## Symptom

The ANTI LOCK light is lit.

## Action

1 With the ECU disconnected, check the circuit between pins 3 and 21 of the ABS ECU via the breakout box.

The resistance should be 3-4 ohms.

If the circuit is OK, clear the trouble code and test-drive the car to check whether the trouble code is triggered again. If so, see page 590-35.

If the circuit is defective, continue as follows:

2 Check that the winding of the OFR valve is intact by measuring the resistance between pins 8 and 10 or 1 of the valve housing.

If the resistance is incorrect, fit a new hydraulic unit. If the resistance is now correct, the fault is in the wiring harness, go to step no. 3.

3 Check the blue and red wire between pin 8 on the connector of the valve housing and pin 21 on the ABS ECU for a break in continuity/short-circuit.

4 Check the lead between pin 10 or 1 on the connector of the valve housing and pin 3 on the ABS ECU for a break in continuity/short-circuit.

## Trouble code 3/53425

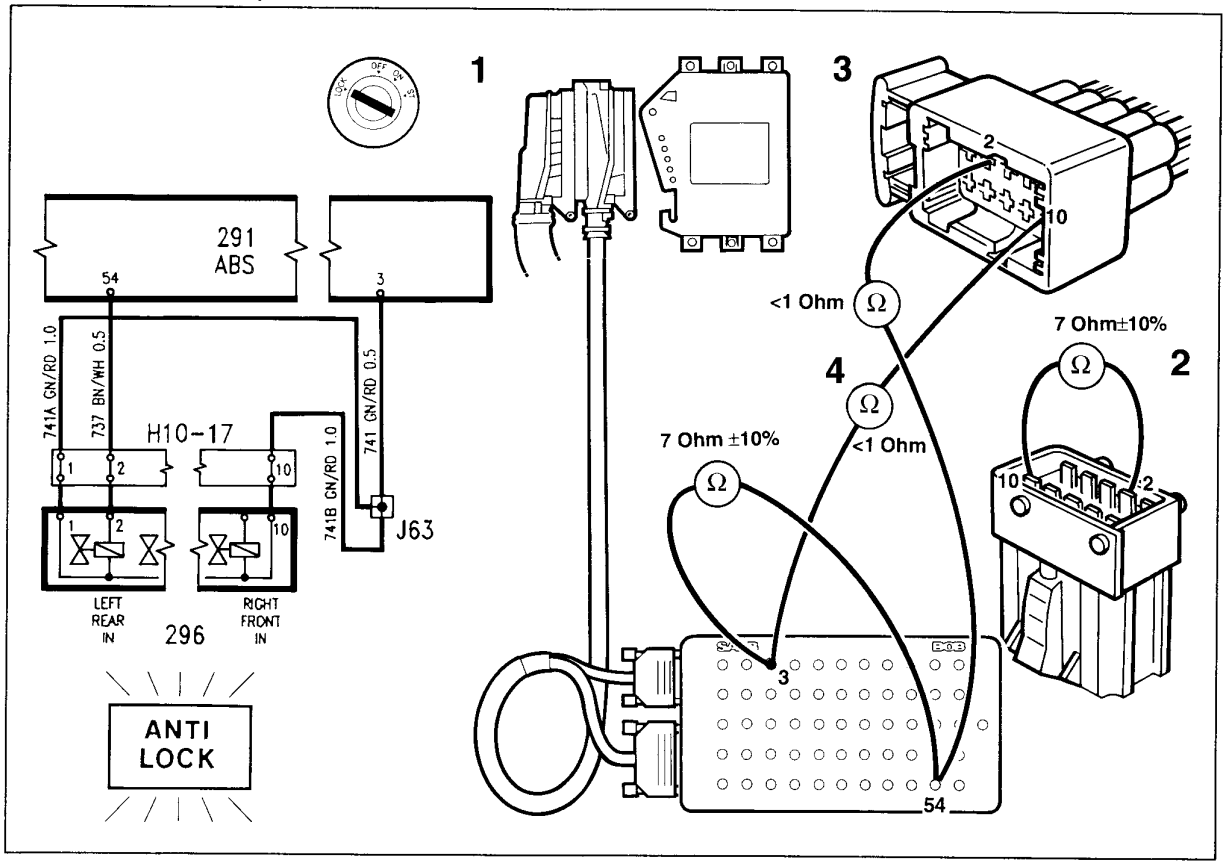


## Cause of fault

Defective left rear inlet valve, break in continuity/ short- circuit to earth/ + 12 V in the wiring loom of the valve or defective ECU.

## Symptom

The ANTI LOCK light is lit.

## Action

1 With the ECU disconnected, check the circuit between pins 54 and 3 of the ABS ECU via the breakout box.

The resistance should be 7 ohms ± 10%.

If the circuit is OK, clear the trouble code and test-drive the car to check whether the trouble code is triggered again. If so, see page 590-35.

If the circuit is defective, continue as follows:

2 Check that the winding of the IFL valve is intact by measuring the resistance between pins 2 and 10 or 1 on the valve body.

If the resistance is incorrect, fit a new hydraulic unit. If the resistance is now correct, the fault is in the wiring harness, go to step no. 3.

3 Check the brown and white wire between pin 2 on the connector of the valve housing and pin 54 on the ABS ECU for a break in continuity/ short-circuit.

4 Check the wire between pin 10 or 1 on the connector of the valve housing and pin 3 on the ABS ECU for a break in continuity/short-circuit.

## Trouble codes 5/33426, 334B3

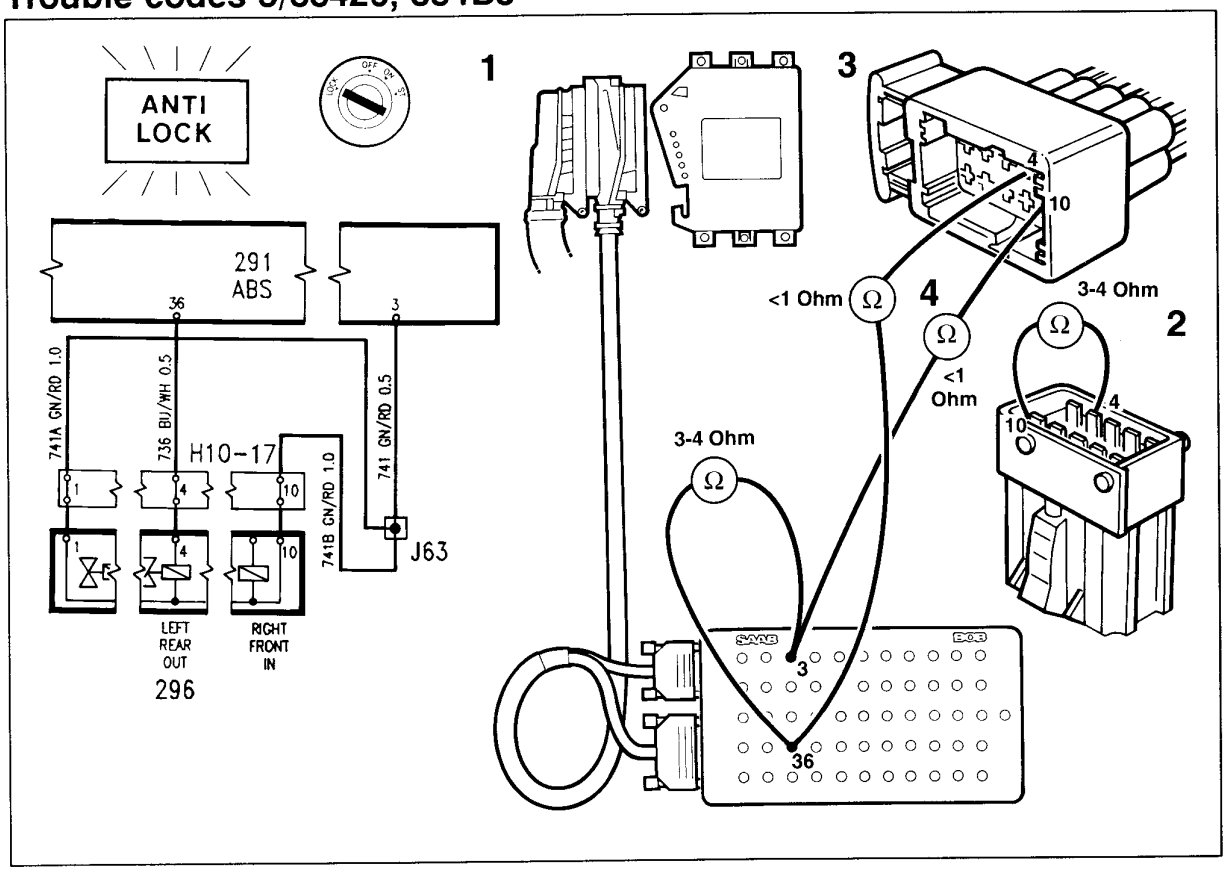


## Cause of fault

Defective left rear outlet valve, break in continuity/ short-circuit to earth/ + 12 V in the wiring loom of the valve or defective ECU.

## Symptom

The ANTI LOCK light is lit.

## Action

1 With the ECU disconnected, check the circuit between pins 3 and 36 of the ABS ECU via the breakout box.

The resistance should be 3-4 ohms.

If the circuit is OK, clear the trouble code and test-drive the car to check whether the trouble code is triggered again. If so, see page 590-35.

If the circuit is defective, continue as follows:

2 Check that the winding of the LRO valve is intact by measuring the resistance between pins 4 and 10 or 1 on the valve body.

If the resistance is incorrect, fit a new hydraulic unit. If the resistance is now correct, the fault is in the wiring harness, go to step no. 3.

3 Check the blue and white wire between pin 4 on the connector of the valve body and pin 36 on the ABS ECU for a break in continuity/ short-circuit.

4 Check the wire between pin 10 or 1 on the connector of the valve housing and pin 3 on the ABS ECU for a break in continuity/short-circuit.

## Trouble code 5/33427

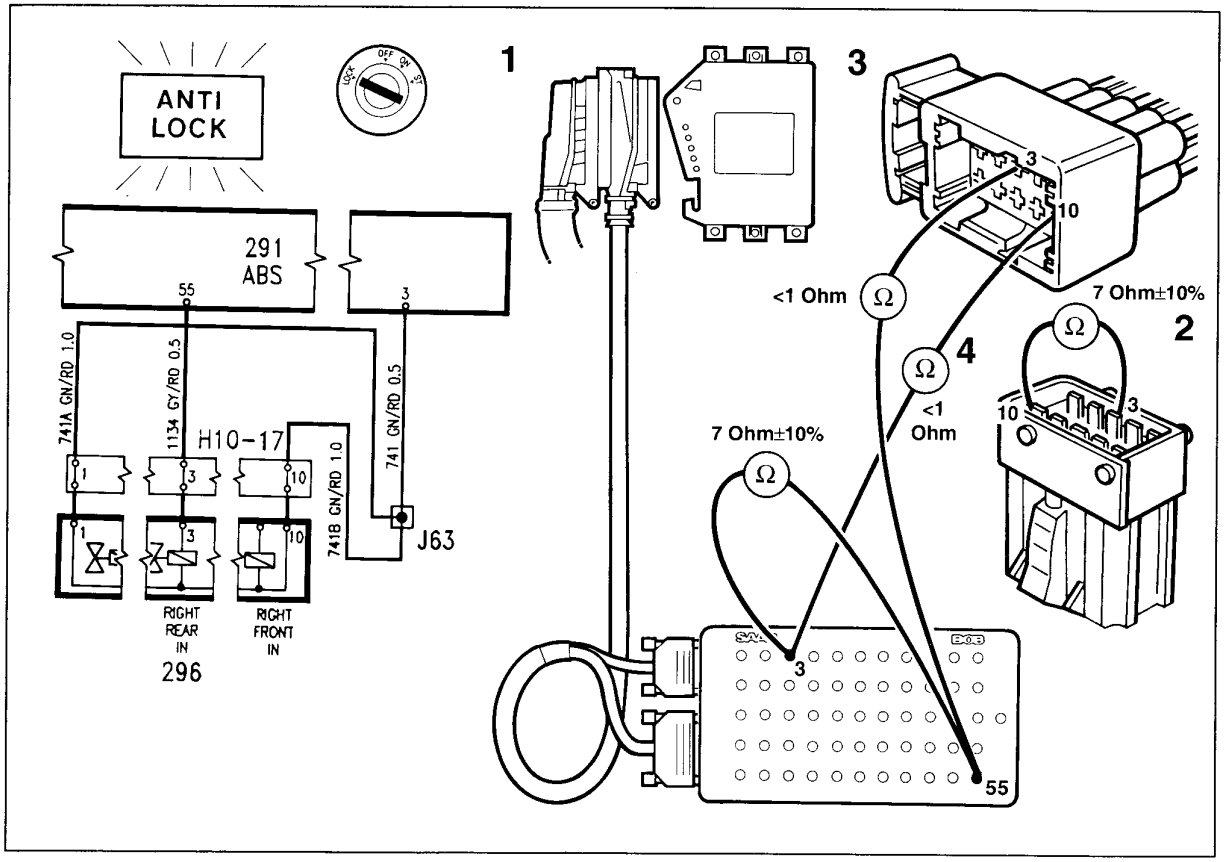


## Cause of fault

Defective right rear inlet valve, break in continuity/ short- circuit to earth/+12 V in the wiring loom of the valve or defective ECU.

## Symptom

The ANTI LOCK light is lit.

## Action

1 With the ECU disconnected, check the circuit between pins 3 and 55 on the ABS ECU via the breakout box.

The resistance should be 7 ohms ± 10%.

If the circuit is OK, clear the trouble code and test-drive the car to check whether the trouble code is triggered again. If so, see page 590-35.

If the circuit is defective, continue as follows:

2 Check that the winding of the main valve is intact by measuring the resistance between pin 10 or 1 and pin 3 on the valve.

If the resistance is incorrect, fit a new hydraulic unit. If the resistance is now correct, the fault is in the wiring harness, go to step no. 3.

3 Check the wire between pin 3 on the main valve and pin 55 on the ABS ECU for a break in continuity/short-circuit.

4 Check the black wire between pin 10 or 1 on the main valve and pin 3 on the ABS ECU for a break in continuity/short- circuit.

## Trouble codes 5/33428, 334B4

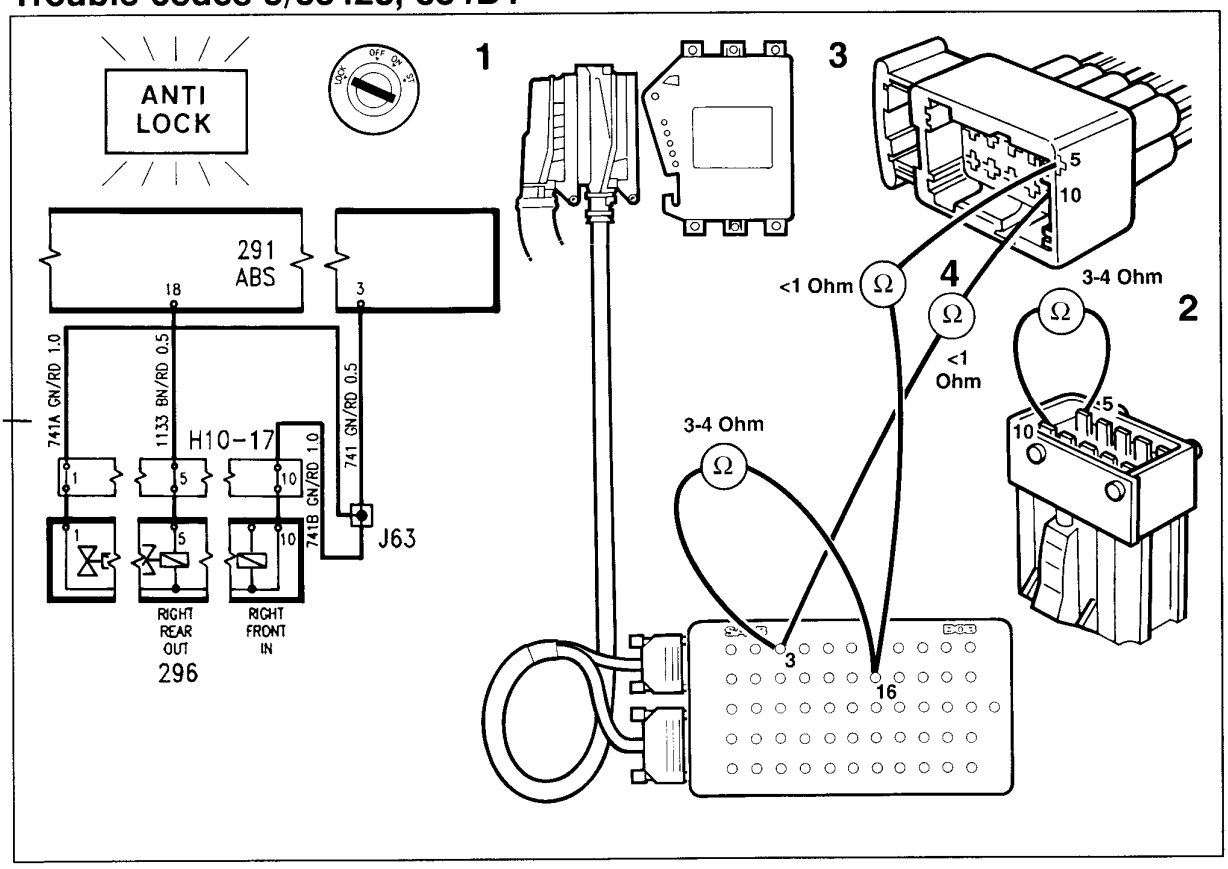


## Cause of fault

Defective right rear outlet valve, break in continuity/ short-circuit to earth/ + 12 V in the wiring loom of the valve or defective ECU.

## Symptom

The ANTI LOCK light is lit.

## Action

1 With the ECU disconnected, check the circuit between pins 3 and 18 on the ABS ECU via the breakout box.
The resistance should be 3-4 Ohms.
If the circuit is OK, clear the trouble code and test-drive the car to check whether the trouble code is triggered again. If so, see page 590-35.
If the circuit is defective, continue as follows:

2 Check that the winding of the main valve is intact by measuring the resistance between pin 5 and 10 or 1 on the valve.
If the resistance is incorrect, fit a new hydraulic unit. If the resistance is now correct, the fault is in the wiring harness, go to step no. 3.

3 Check the brown and white wire between pin 5 on the main valve and pin 18 on the ABS ECU for a break in continuity/short-circuit.

4 Check the wire between pin 10 or 1 on the main valve and pin 3 on the ABS ECU for a break in continuity/short-circuit.

## Trouble code 775B1

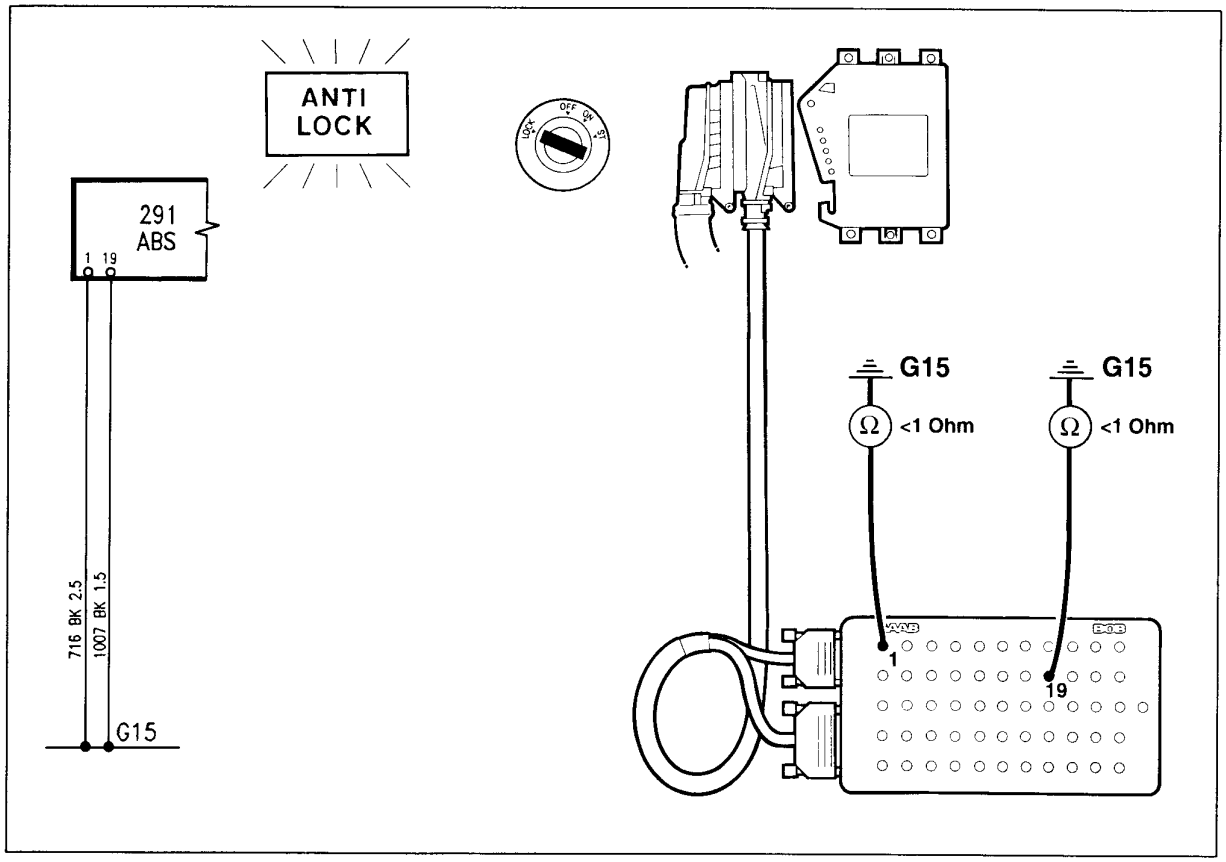


## Cause of fault

ECU fault

## Symptom

The ANTI LOCK light is lit.

## Action

1 If the trouble code returns, check the earth connections of the ECU at pins 1 and 19 and that grounding point G15 is OK.

2 Clear the trouble code and test-drive the car to check whether it returns.

3 See page 590-35.

## Trouble code 775B2

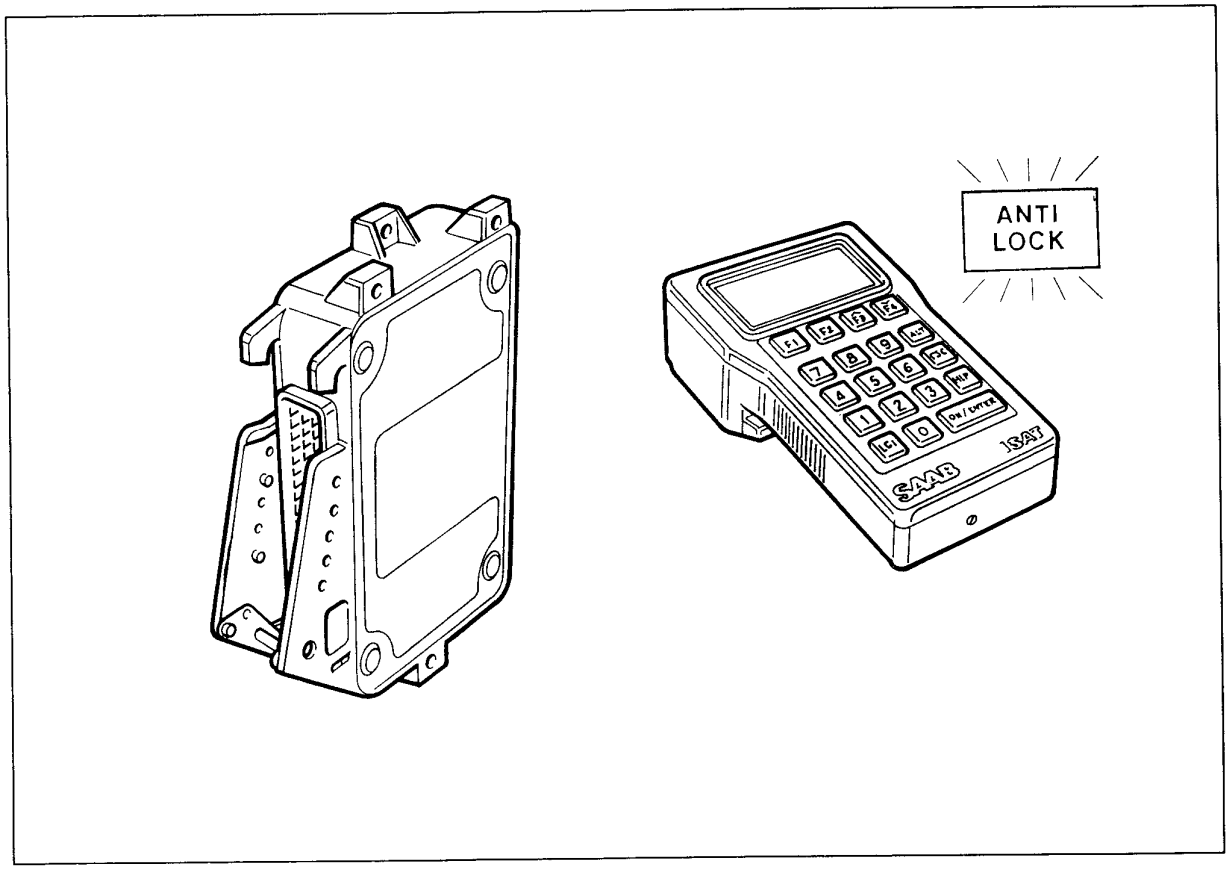


## Cause of fault

RAM fault (ECU fault)

## Symptom

The ANTI LOCK light is lit.

## Action

1 Delete the trouble code and test-drive the car to check whether it returns. Check input signals.

2 If the trouble code returns, go to page 590-35.

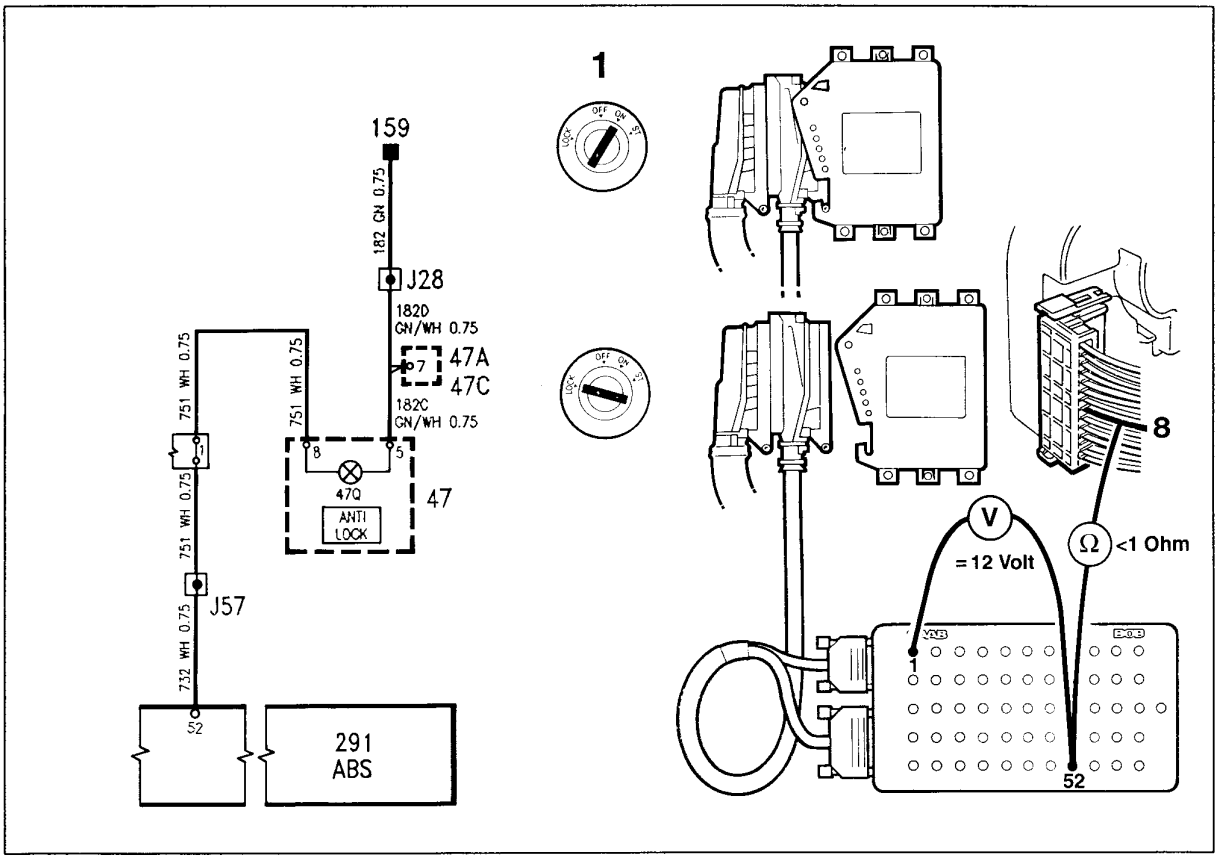


## Warning lights

## Symptom

The warning light does not come on when the ignition switch is turned to the Start position.

## Action

If any of the warning lights malfunctions, carry out fault- tracing as follows.

### ANTI LOCK

The light and the wire to pin 52 can be checked as follows:

1 With the connector of the ECU plugged in and the ignition switch in the Drive position, check that there is battery voltage at pin 52.
If not, check that the bulb is intact and also check the white wire between pins 52 and 8 of the main instrument display panel.

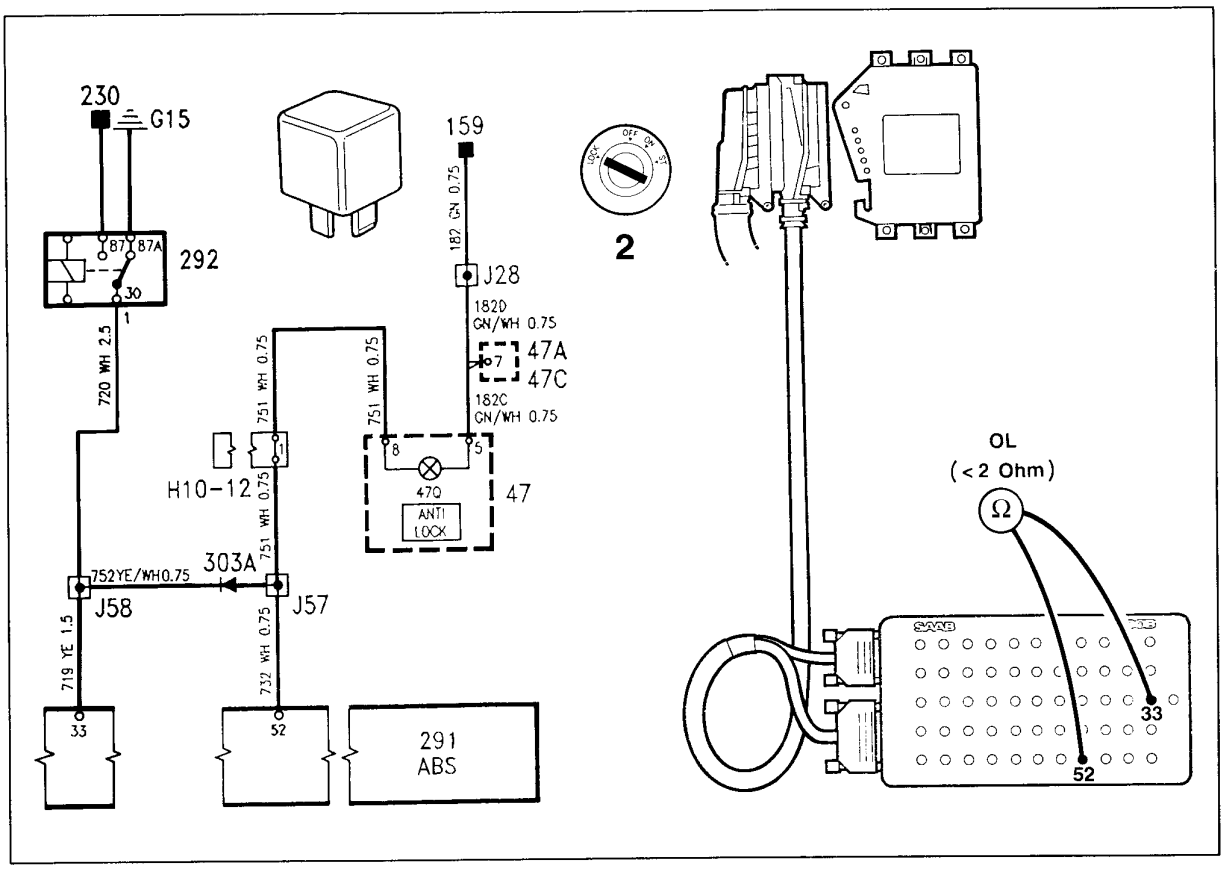


2 With the ignition turned off and with the ECU and main relay disconnected, check the circuit between pins 52 and 33.
Also check that the diode is non-conducting to pin 52.

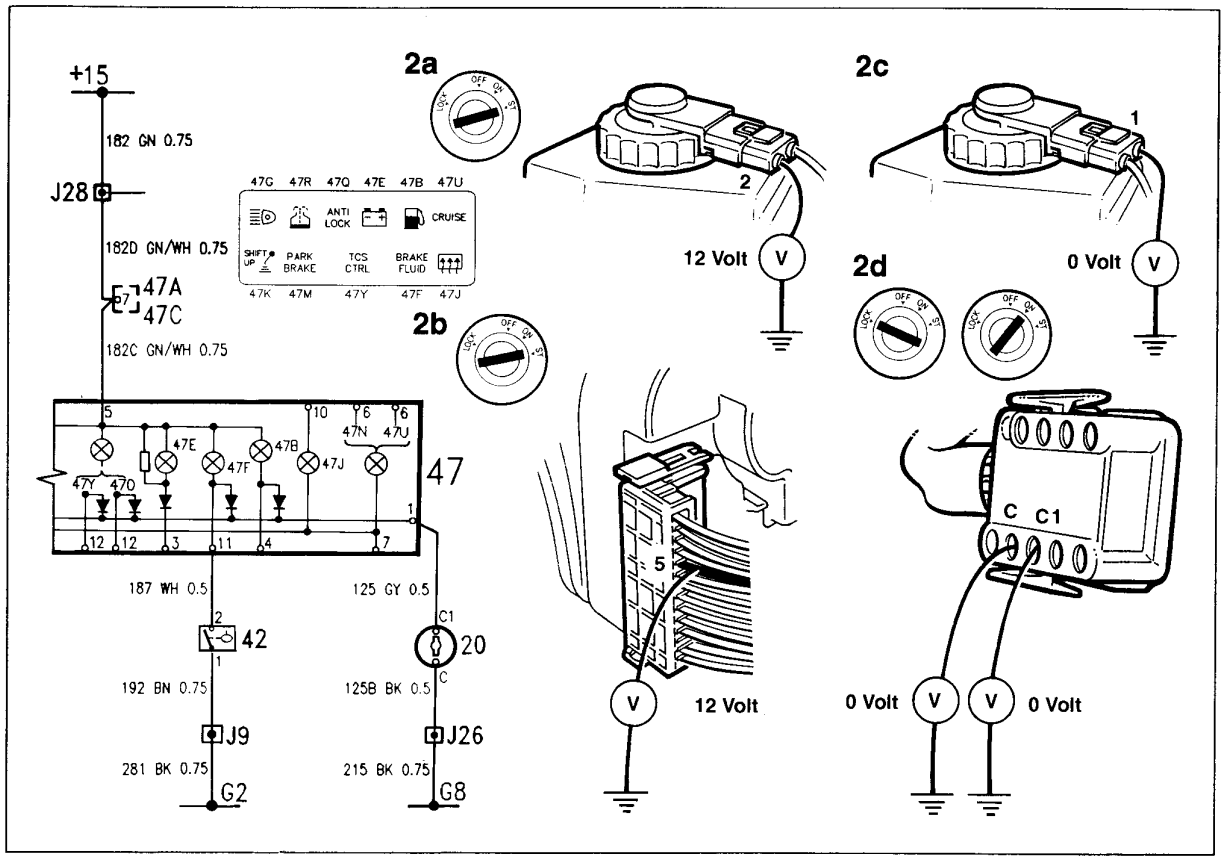


## Warning light, brake fluid level

## Symptom

Brake fluid level warning light inoperative.

**Note**

If the brake fluid level warning light (or other lights in the circuit) come on when the car is started, there is probably no fault in earthing via the ignition switch. The power supply to pin 5 is probably OK.

**Light comes on when the car is started:**

With the ignition on, check for 12 Volts at pin 2 on the brake fluid reservoir.

If no voltage is discovered on pin 2, check pin 5 on the combined instrument.
If 12 V is present, there is no fault in the power supply.

Check the light. If the light is intact, fit a new circuit. Also check that pin 1 is earthed.
If no earthing is found, check the earth supply. If earthing is found, fit a new float.

If there is no voltage present at pin 5 on the combined instrument , there is a fault in the power supply.

**Light does not come on when the car is started:**

Check that the lamp comes on when the float is pressed down in the reservoir.

Check pin 1 of the main instrument display panel. Test position of ignition switch = 0 V.

If 0 V: replace the circuit board
If voltage is present, check earth C on the ignition switch.

If earthed, fit a new ignition switch.

If not earthed, check the earthing.

## Trouble codes 45721, 25721

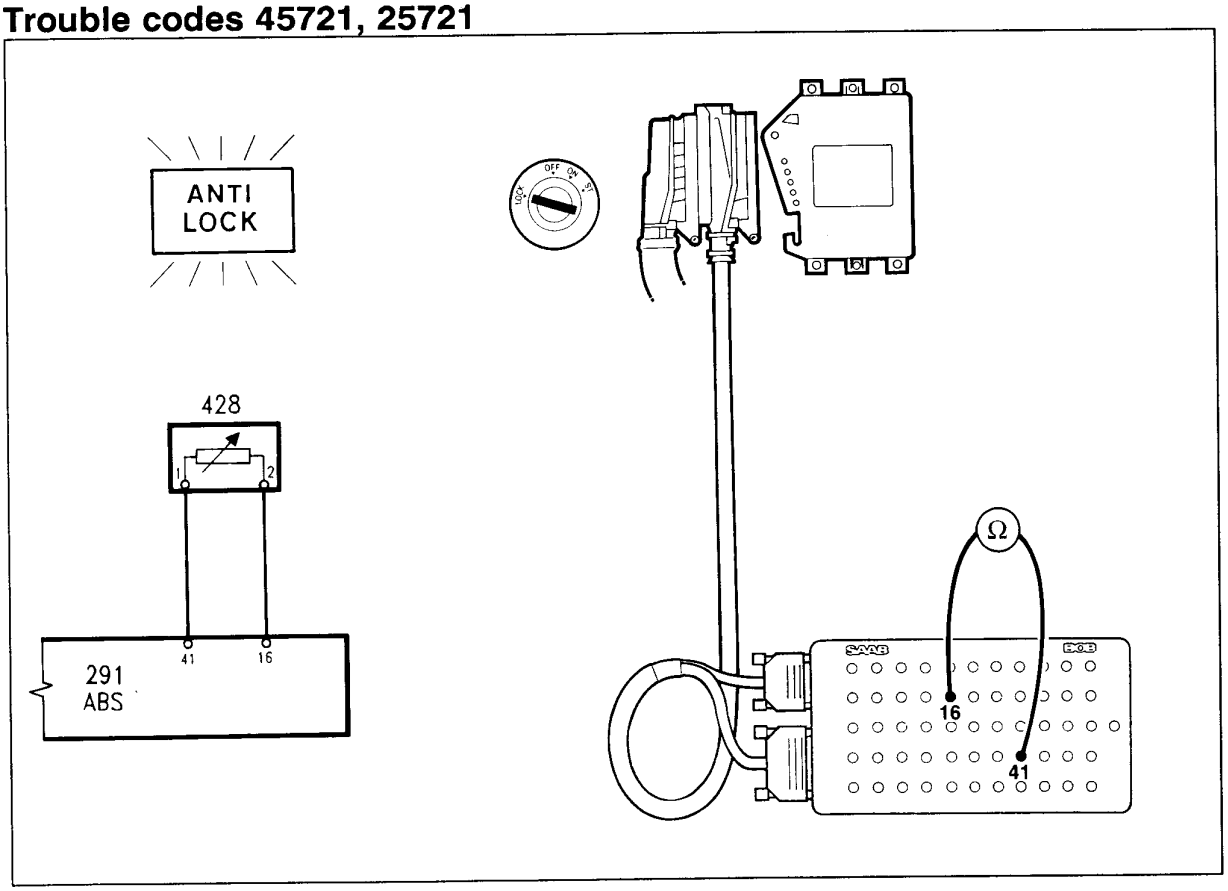


### Cause of fault

No signal or continuity from travel sensor.

### Symptom

The ANTI LOCK light comes on.

### Action

1 Connect breakout box
2 Check voltage between pins 41 and 16 in accordance with the table.
3 Remove the travel sensor. Check resistance in accordance with the table. If the value is correct, clear the code and test-drive the car. If the code returns, fit a new ECU. See page 590-35.

| Position of travel sensor | Resistance Ohms | Voltage Volts |
|---|---|---|
| 1 | 250 | 1.0 |
| 2 | 437 | 1.7 |
| 3 | 564 | 2.3 |
| 4 | 691 | 2.8 |
| 5 | 817 | 3.3 |
| 6 | 1034 | 4.1 |
| 7 | OL | 10.0 |

## Trouble code 24791

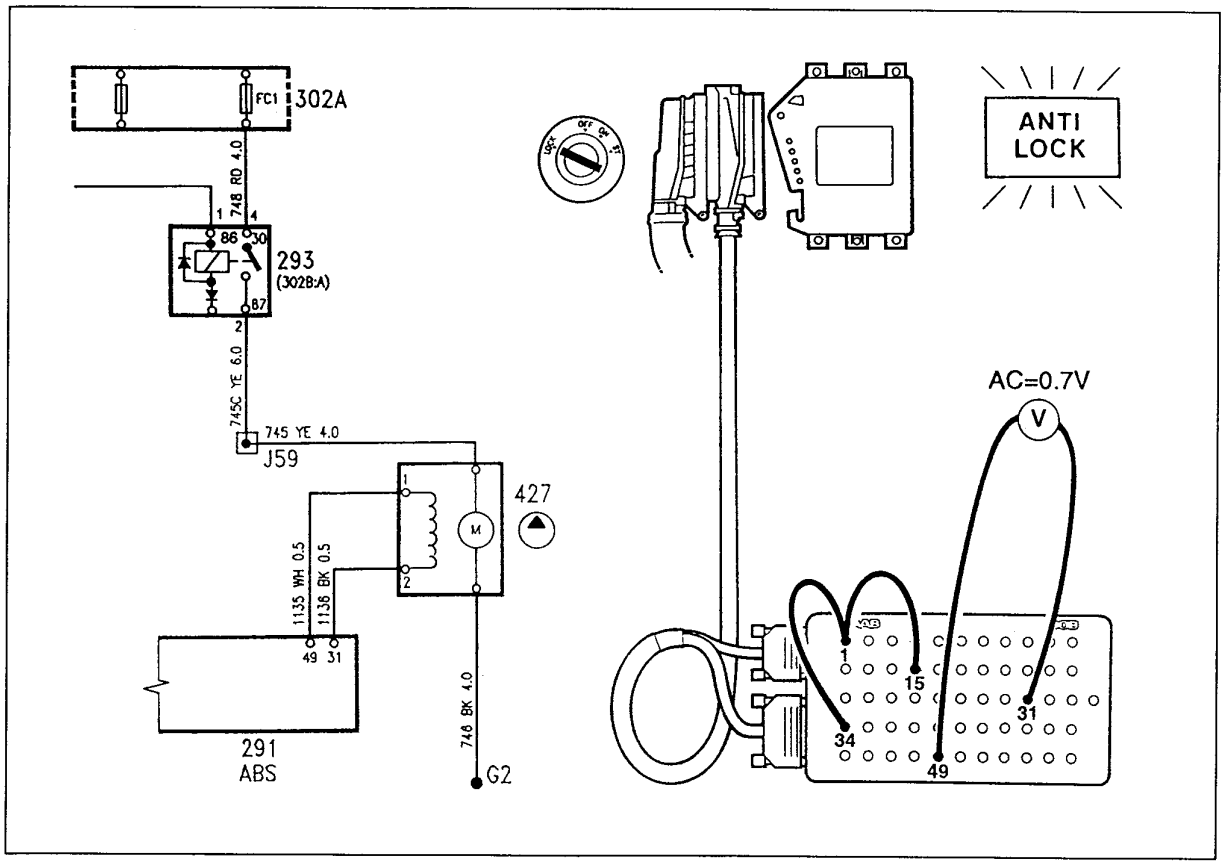


## Cause of fault

The pump is defective, does not operate despite control signal

## Symptom

The ANTI LOCK light is lit

## Action

1 Connect a breakout box to the ECU connector.

2 Check fuse FC 30A.

3 Check whether 12 V is present on pin 30 of the pump relay and whether 0 V is present on pin 87 (earth through motor).

4 Activate the pump by connecting pins 1, 34 and 15 on the breakout box for a maximum of 2 minutes.

5 Check that the ABS pump relay clicks.

6 Check pins 49 and 31 on the breakout box. Motor running = approx. 0.7 V AC
Motor stationary = 0 V.
Check pin 2 with relay operated. If 12 V is present - check earthing. If OK - fit a new pump.

## Trouble codes 44792, 24792

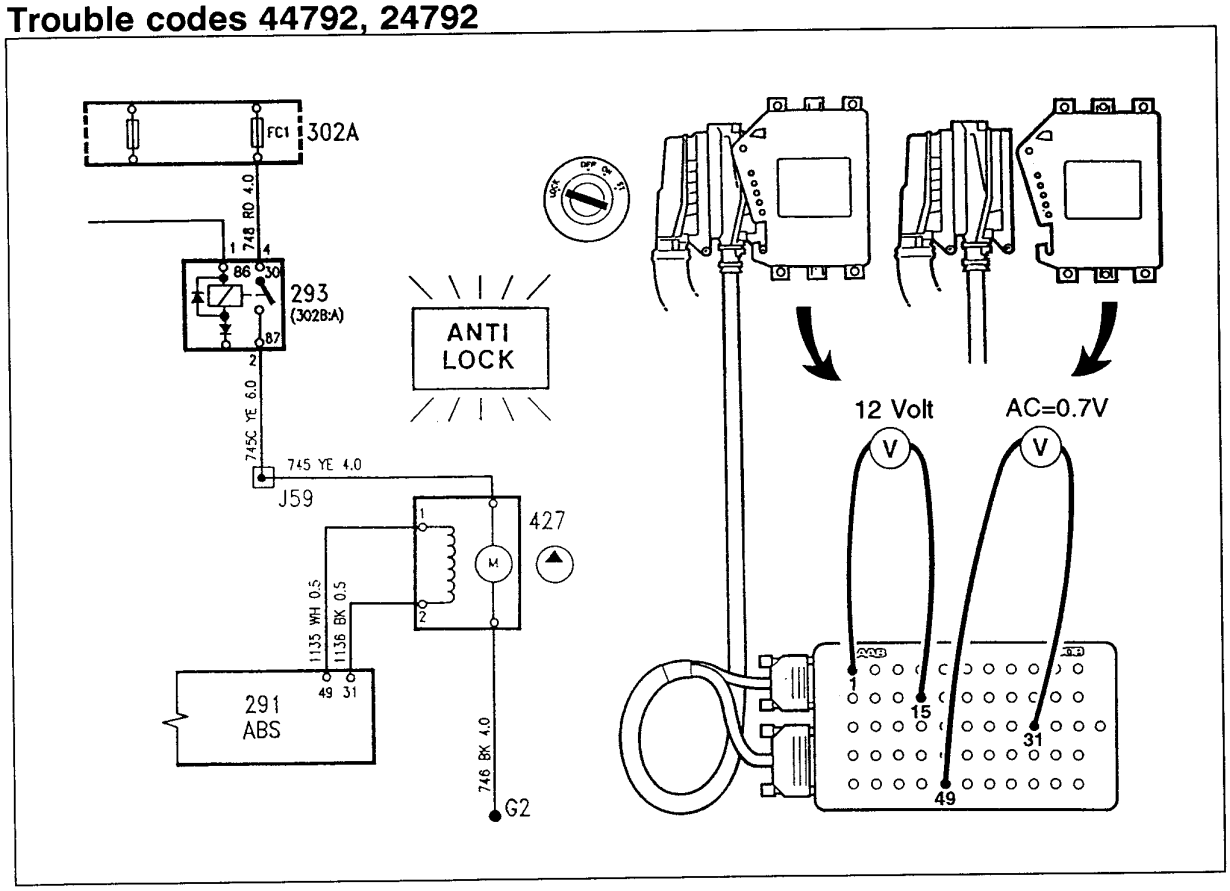


## Cause of fault

Pump runs without instructions from ECU.

## Symptom

The ANTI LOCK light is lit.

## Action

1 Unplug the ECU and connect a breakout box to its connector.

2 Check that the pump motor and speed sensor are operative (see previous page)

3 Check the travel sensor (see page 590 - 31).

4 Check the voltage on pin 15 of the breakout box. It should be 12 V. If the voltage is not correct, see page 590-35.

## Trouble code E75B1

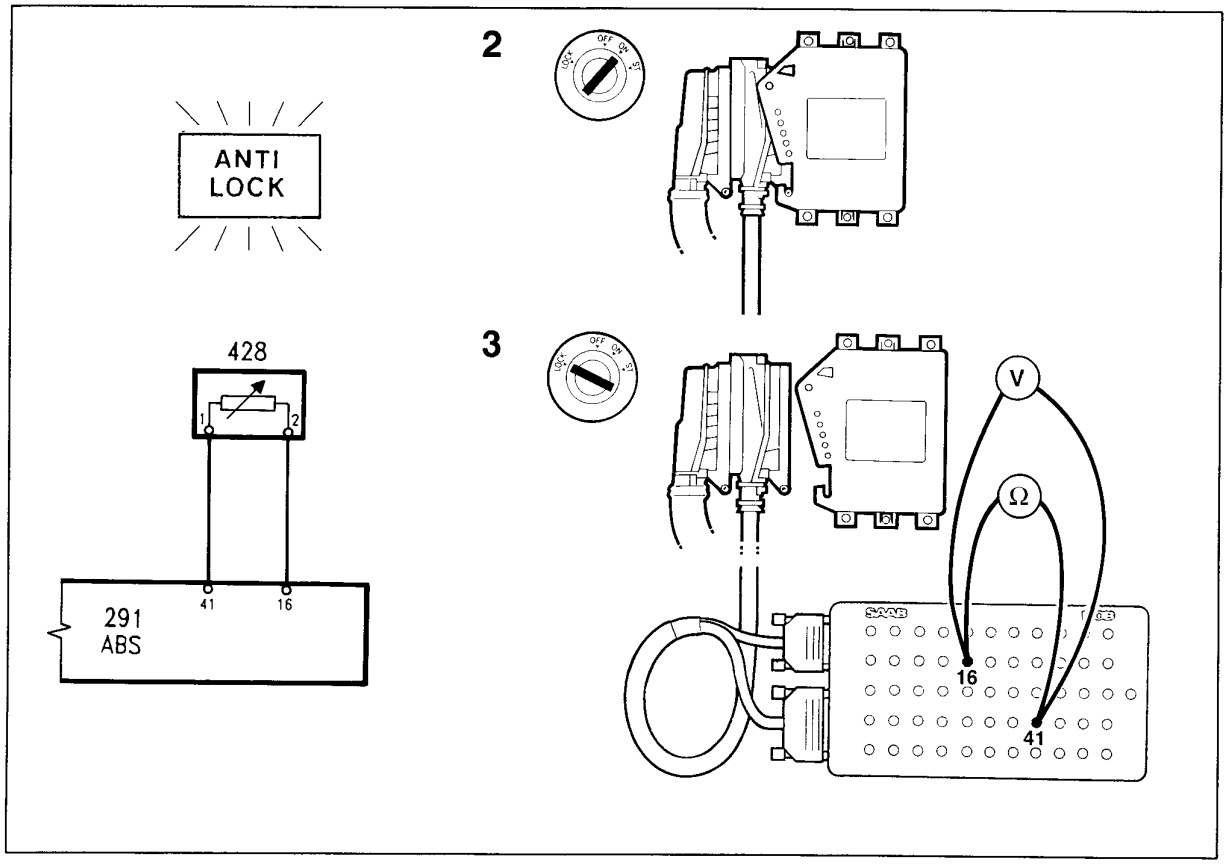


## Cause of fault

Hydraulic fault

## Symptom

The ANTI LOCK light is lit.
If the brake pedal reaches position 7 during normal or ABS braking, the pump will start up. If the hydraulic pressure cannot push back the master cylinder, the trouble code will be displayed.

## Action

1 Check visually that there is brake fluid in the system and check the thickness of the brake pads. Also check the hoses to see whether they are swollen. Check the operation of the master cylinder.

2 Remove the travel sensor. Check that you obtain seven values (see table). If the values are correct, go to page 590-35.

| Position of travel sensor | Resistance Ohms | Voltage Volts |
|---|---|---|
| 1 | 250 | 1.0 |
| 2 | 437 | 1.7 |
| 3 | 564 | 2.3 |
| 4 | 691 | 2.8 |
| 5 | 817 | 3.3 |
| 6 | 1034 | 4.1 |
| 7 | OL | 10.0 |

## Action to be taken before replacing the ECU

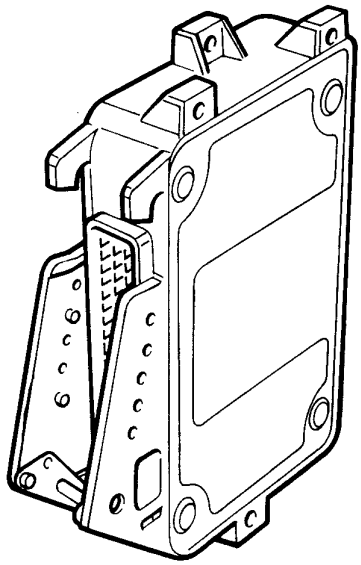

When all the checks have been carried out according to the action sequence under the relevant trouble code without any faults being discovered, it is logical to assume that the ECU is defective.

As the ECU is a very high-quality and expensive component, it is important to be as sure as possible of the diagnosis.

The following steps must therefore be carried out carefully before the ABS ECU is identified as the cause of the fault.

1 Check the following:

- Correct wheel size
- All wheels are of the same height/width
- Correct air pressure in all wheels
- No play in wheel bearings.

  Check once again that all the steps in the fault-diagnosis routine concerned have been carried out.

2 Study the wiring diagram of the circuit concerned and familiarize yourself with how it works. If necessary, consult the relevant parts of the technical description and the electrical description of operation in Service Manual 3.2 "Electrical system".

3 Check all the grounding points. If you have done this previously, do so once again. Check that power ground and signal ground are electrically separated.

4 Check the power supply to the ECU.

5 Clear the trouble code. Test-drive the car again. If the original fault persists, the ABS ECU must be replaced.

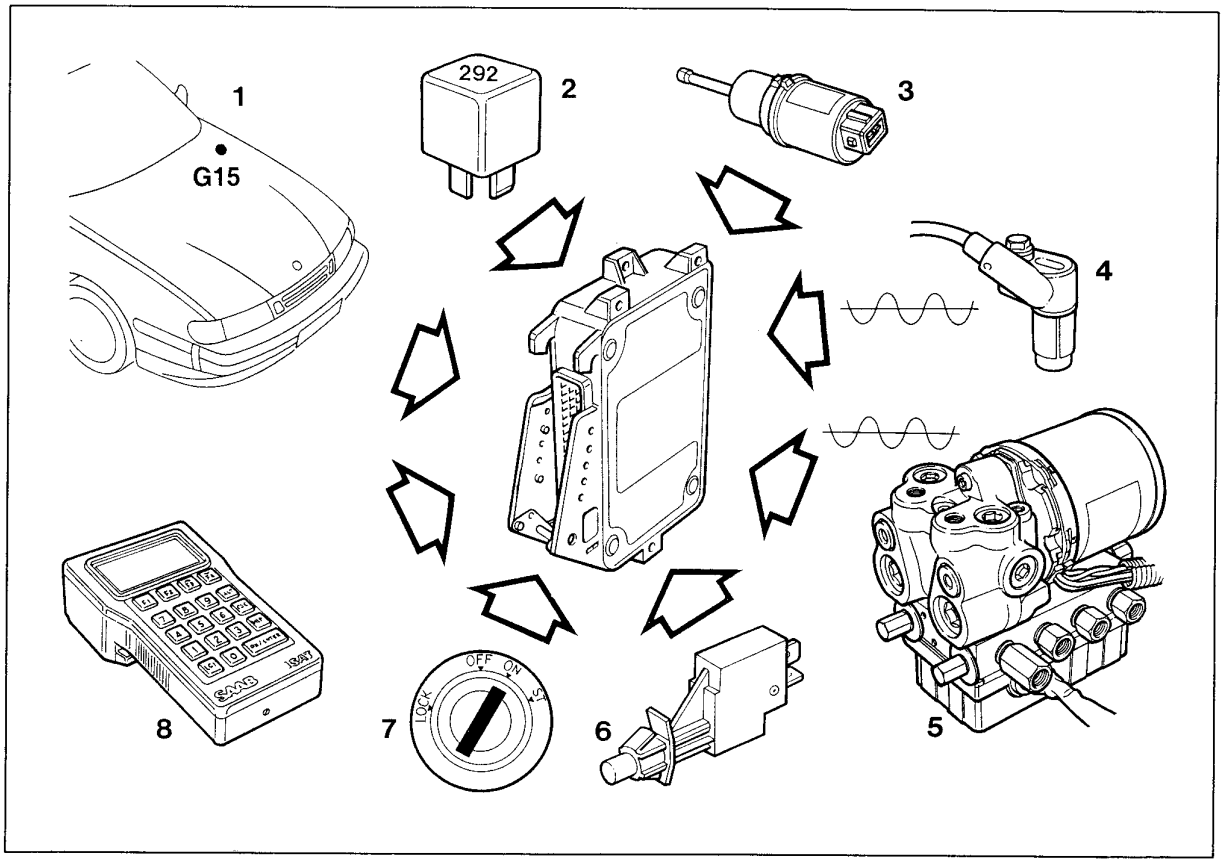


## Input signals

1 **Ground** pins: 1, 19
2 **Supply of main relay** pins: 3, 33
3 **Travel sensor** pins: 41, 16
4 **Wheel sensor** pins: 27, 28, 29, 30 and 45, 46, 47, 48
5 **Pump speed sensor** pins: 49, 31
6 **Brake light switch** pin: 32
7 **Ignition** pin: 53
8 **ISAT** pins: 23

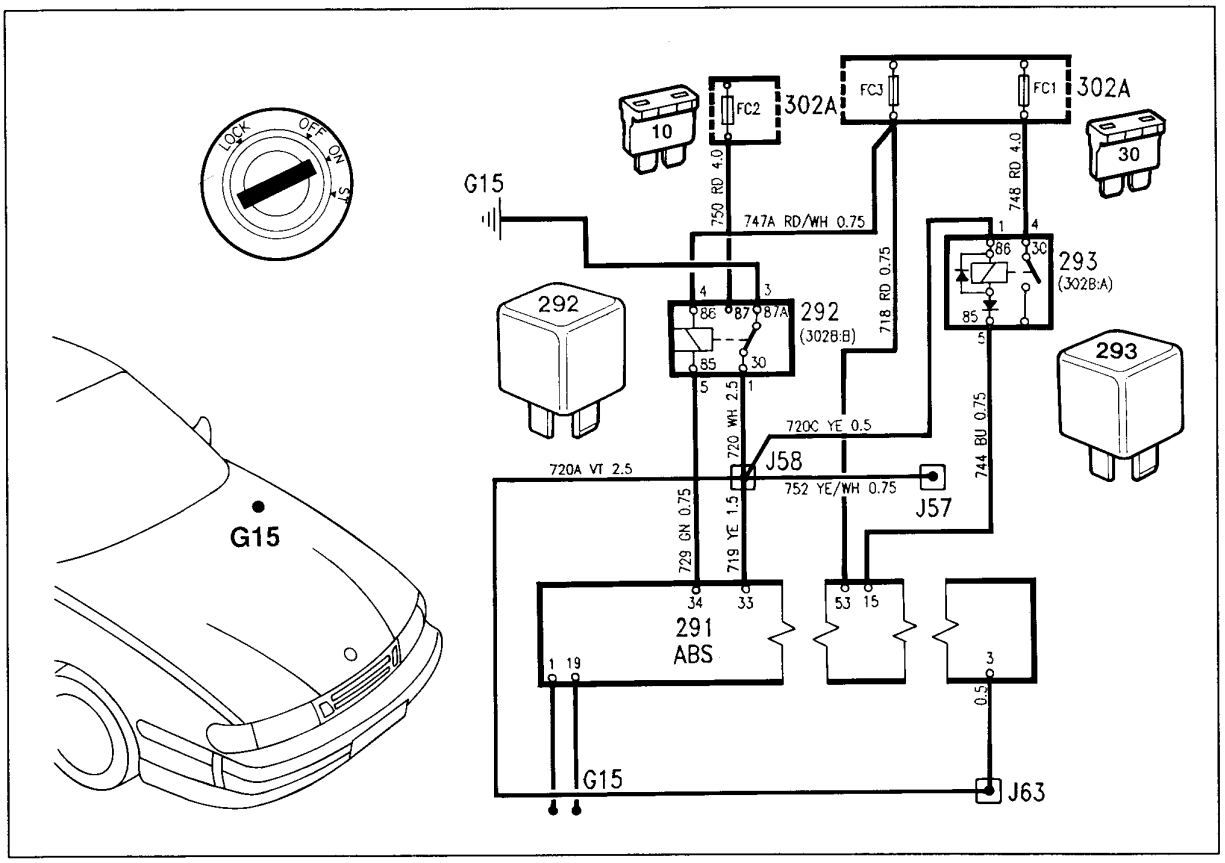


## Input signals

## Ground and ignition

The unit is grounded at pins 1 and 19 to grounding point G15 at the TSI socket. The pump is grounded through earthing pont G2, which is located beside the battery tray.

Power supply pin 15 receives +54 current from J31 via ignition.
The main relay passes current to pins 33 and 3 after being activated from pin 34.

The circuit is protected by a 30A fuse in the ABS main fuse box.

The following components are connected to grounding point G15 at the TSI socket:

291 ABS ECU
292 ABS main relay (pin 85)
382 TC-ABS ECU

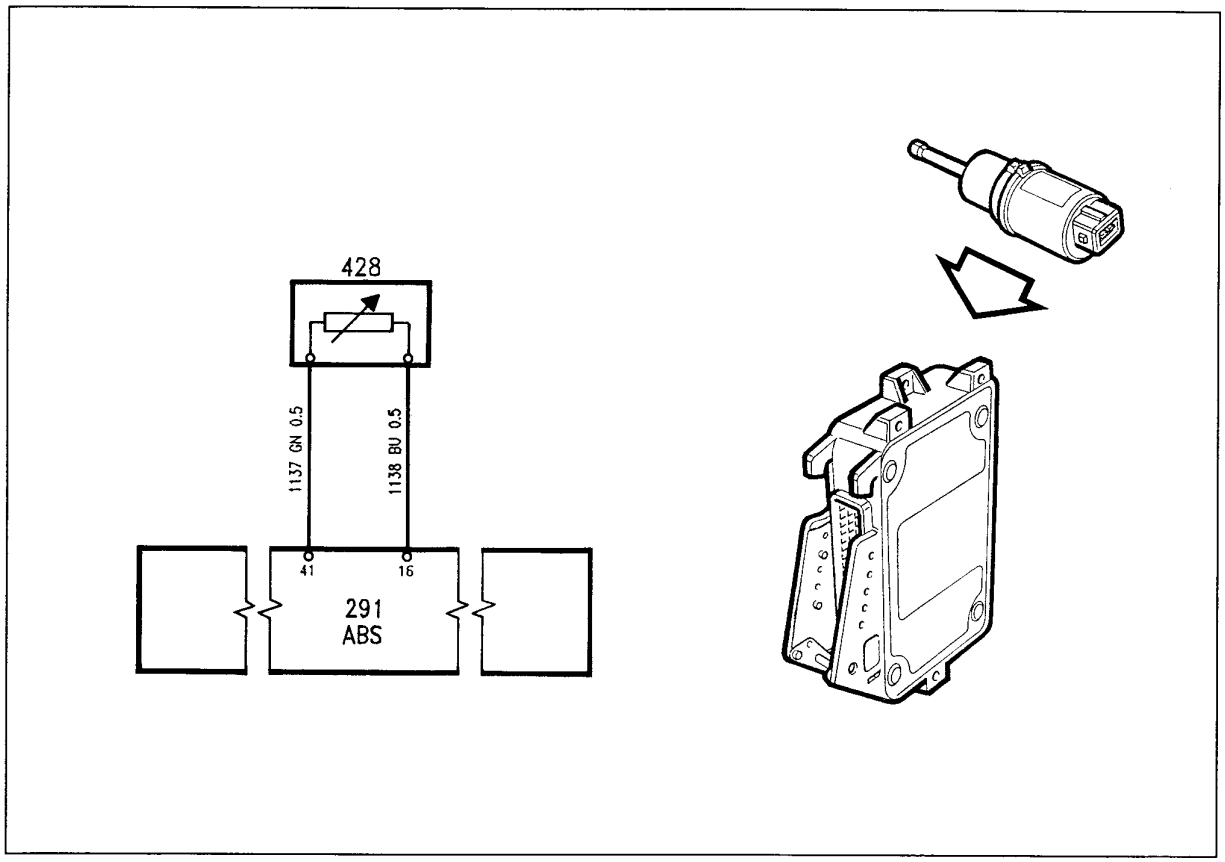


## Input signals

## Travel sensor

The travel sensor gives the ECU information on the position of the brake pedal.

When ABS braking takes place, the ECU activates the pump relay and the pump runs until the travel sensor has gone back one step.
The travel sensor has seven positions, and consists of a number of resistors connected in series which are read by a sliding contact.
This also passes information on hydraulic faults to the ECU.

Position 0 on the travel sensor means that the travel sensor has come away.
The ABS system continues to function but a trouble code is displayed.

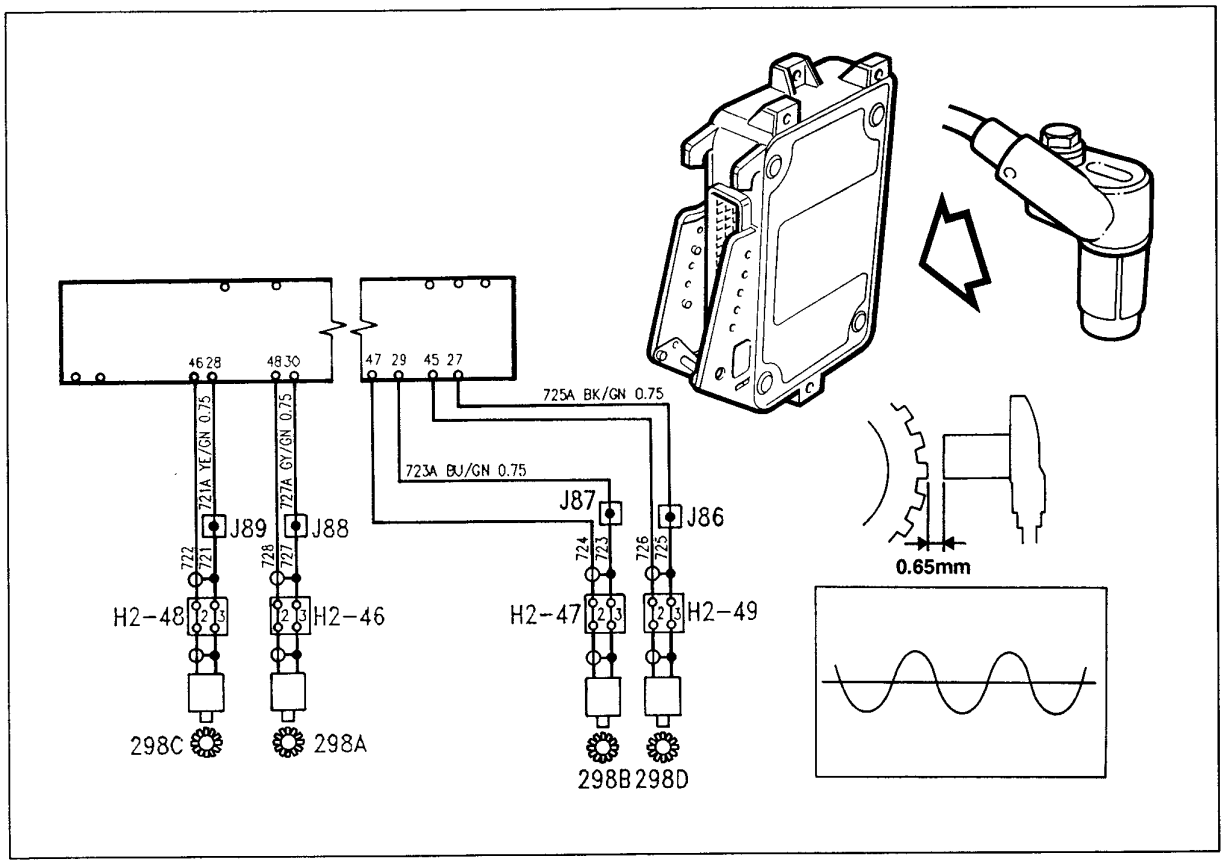


## Input signals

## Wheel sensors

The wheel sensors give signals to the ECU relating to wheel speed.
The voltage must be between 150 and 700 mV AC.

The gap between the sensor and sensor wheel must be 0.65 mm.

There is no ABS effect on the wheels at speeds below 6 km/h.

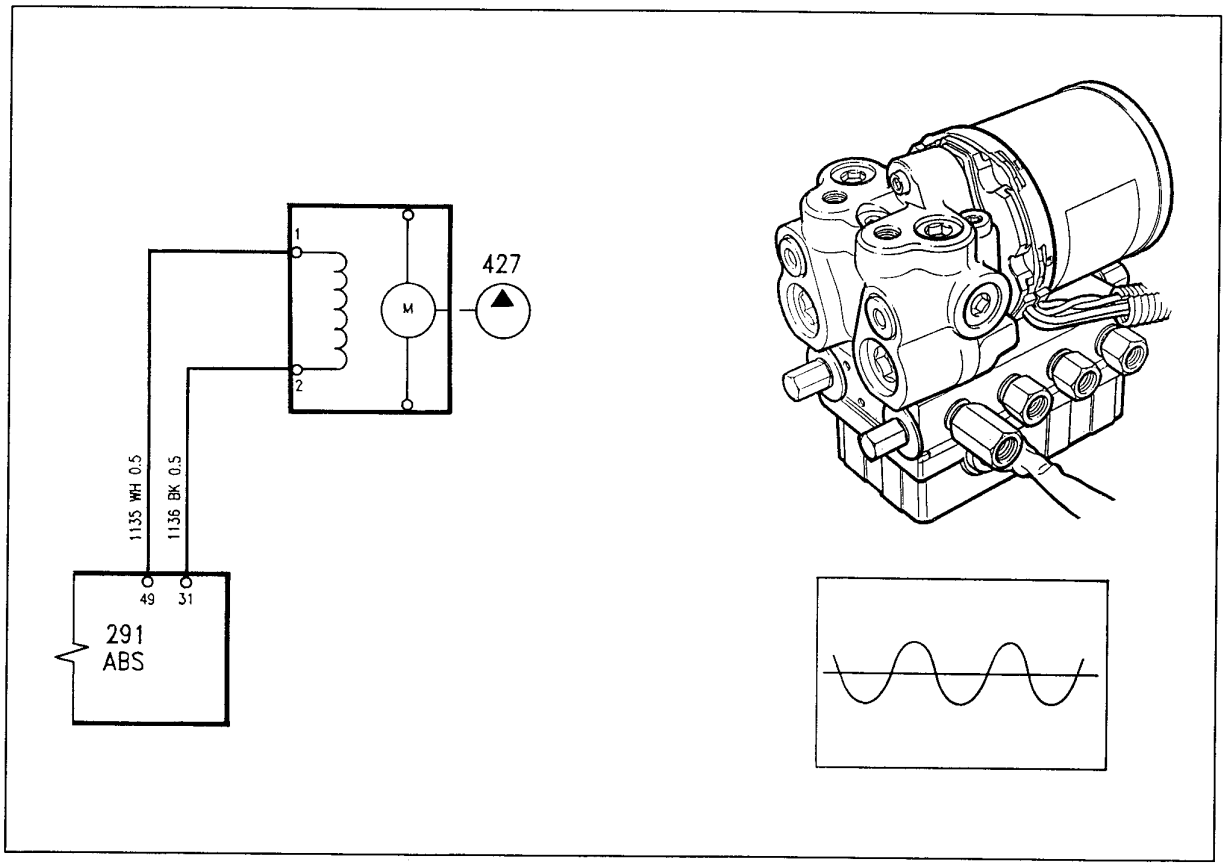


## Input signals

## Pump speed signal

Pins 49 and 31 signal to the ECU that the pump motor is running.
The signal is 0.8 V AC

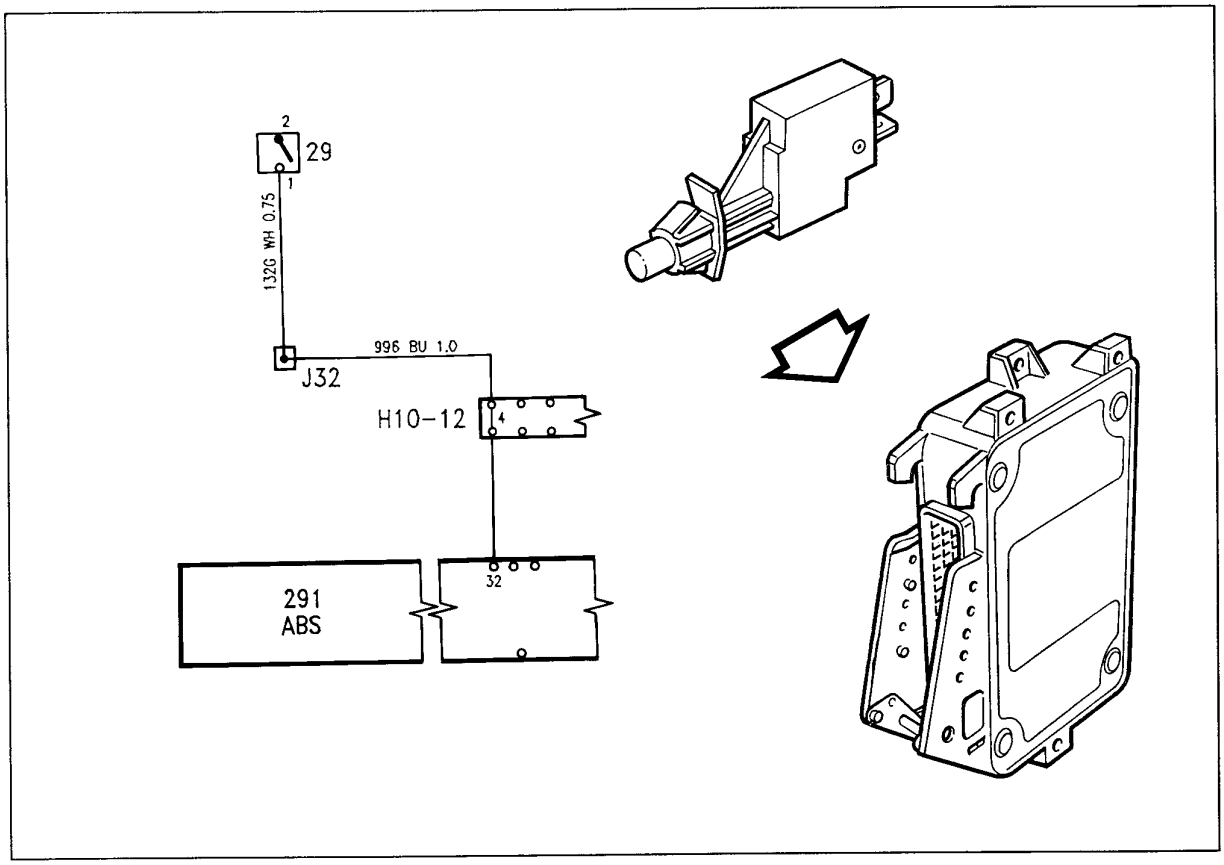


## Input signals

## Brake light switch

The ECU receives +12 V when the brakes are applied.
The signal is for fault-tracing in the ECU with regard to the pump and travel sensor.

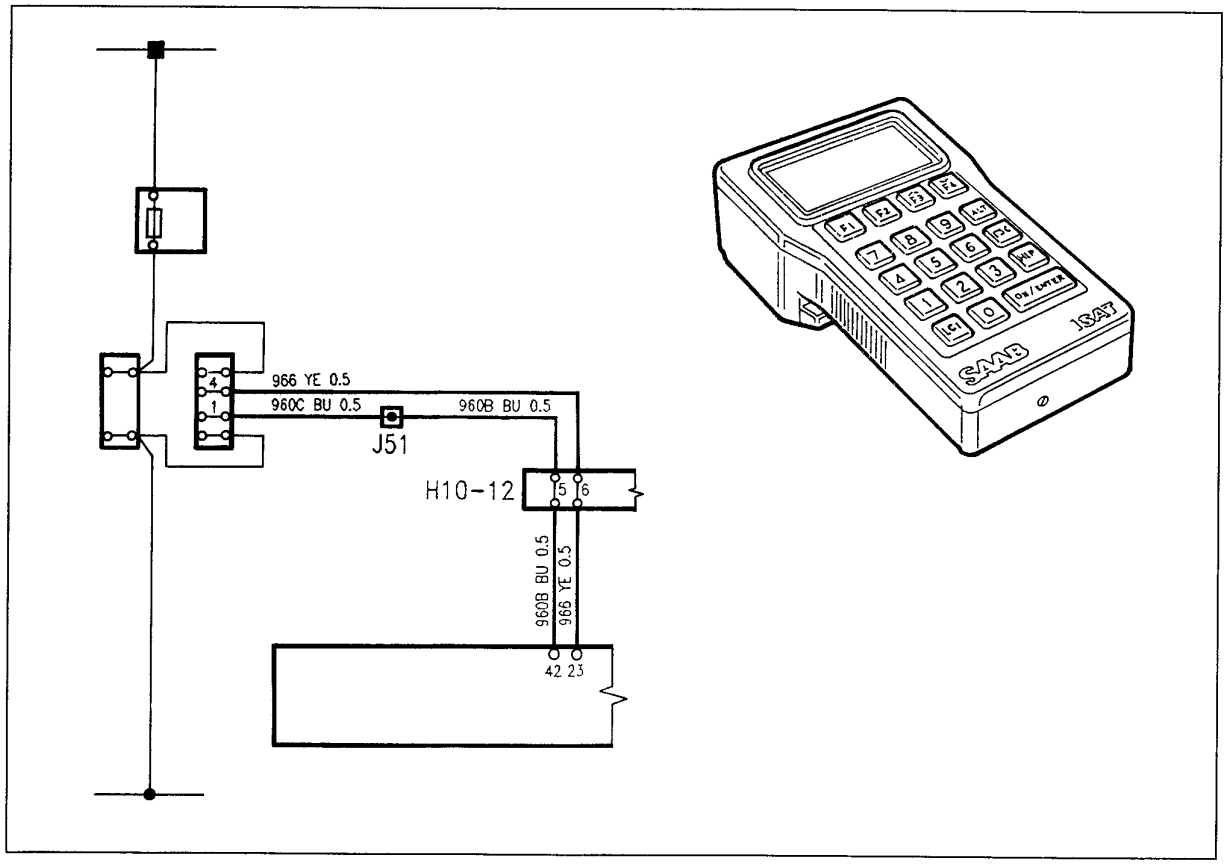


## Input signals

### ISAT

The ISAT can communicate with the ECU through pin 23. Lead L.

The communication will be shown as trouble codes and command codes on the ISAT display.

Connect the ISAT to the green connector, right-hand side No. 3 ABS

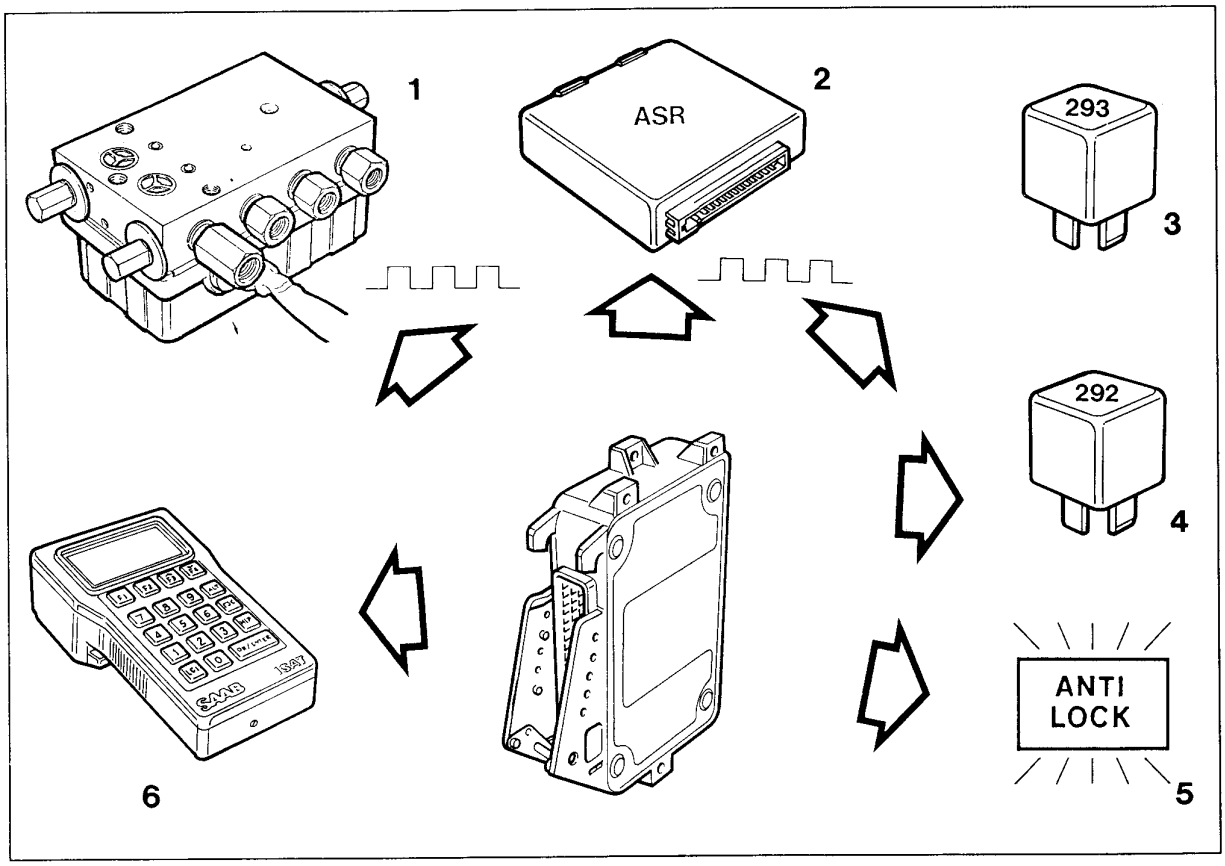


## Output signals

1 **Valve body** outlet valve pins: 2, 18, 36, 21 inlet valve pins: 20, 38, 54, 55

2 **ASR wheel speed** pins: 9 (right rear), 10 (left front), 11 (right front), 12 (left rear)

3 **Pump relay** pin: 15

4 **Main relay** pin: 34

5 **ANTI LOCK light** pin: 52

6 To **ISAT** pin: 42

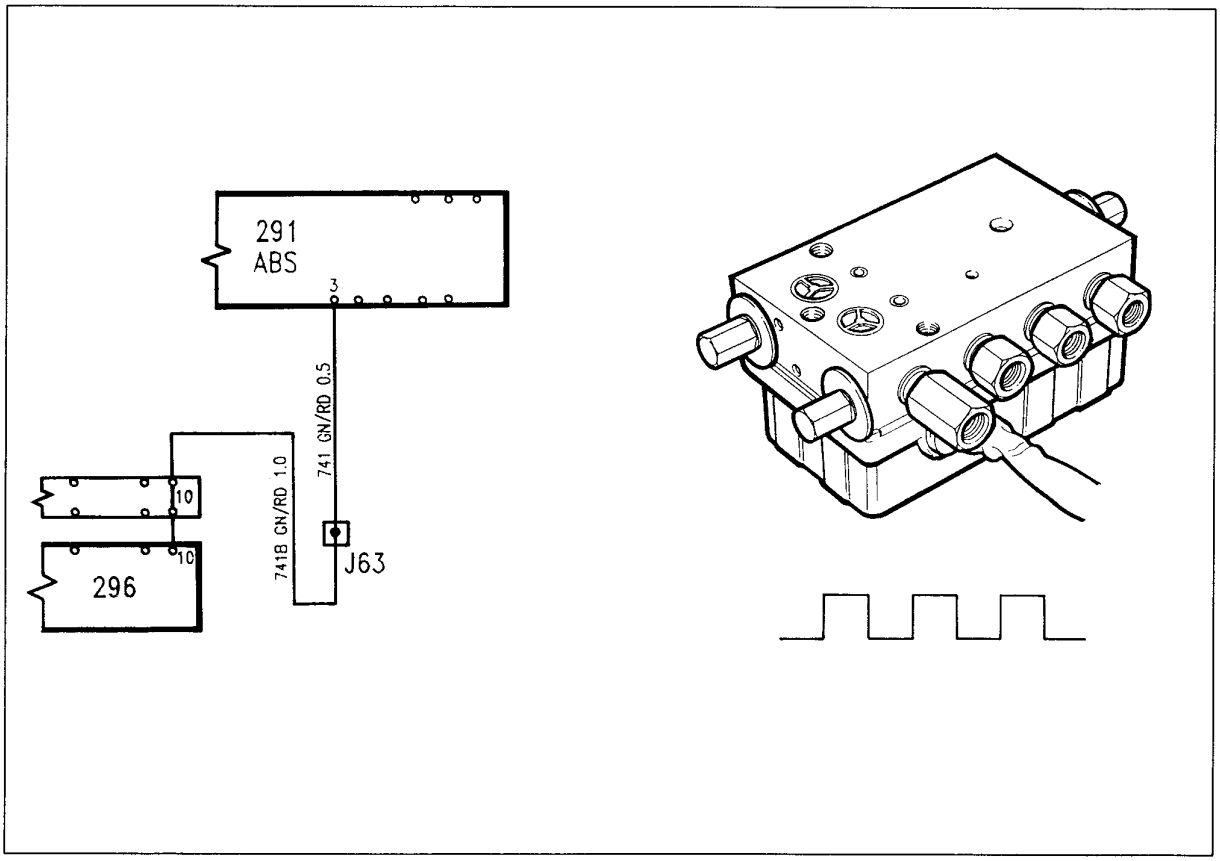


## Output signals

## Valve block

The ECU receives +12 V on pin 3. This also provides current to the valves on the valve block, pins 1 and 10.

The valves are grounded, if necessary, through the valve block by a PWM signal.

The frequency depends on how long the valves are activated.

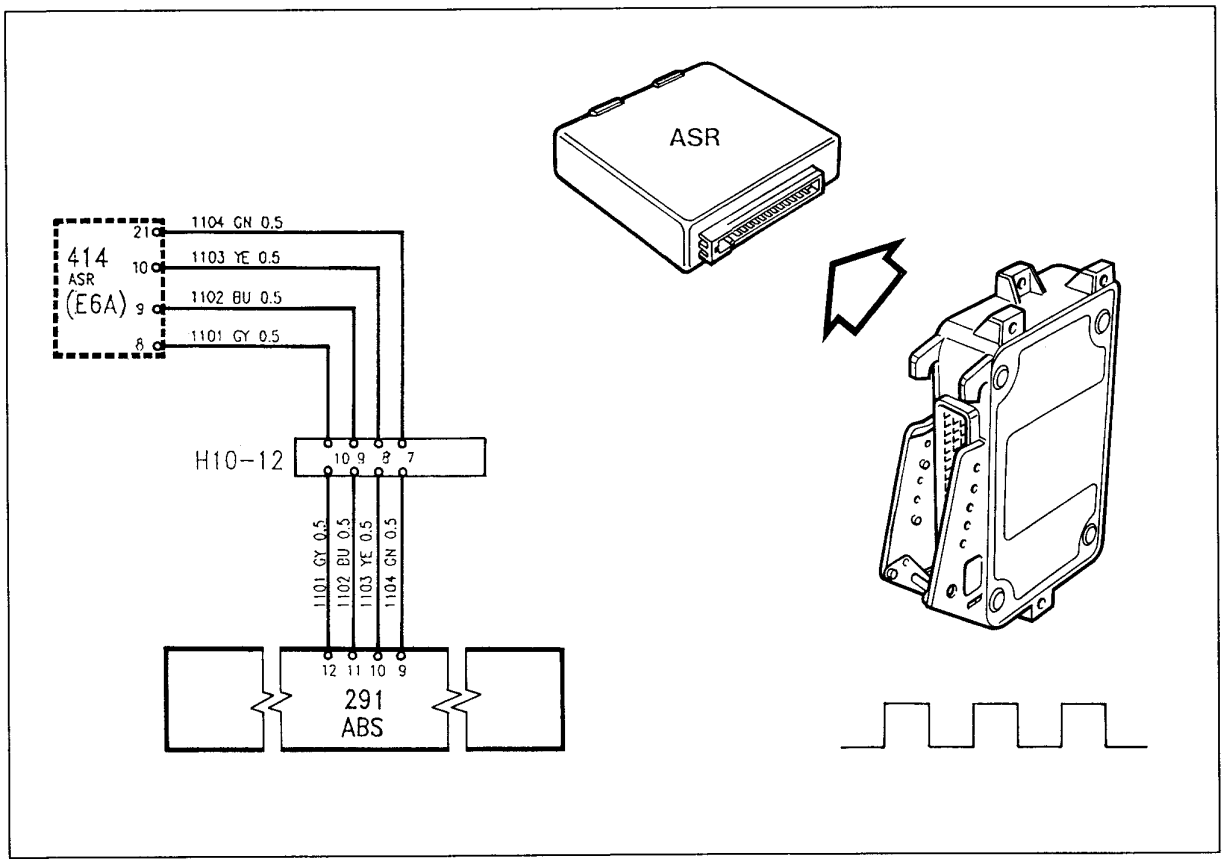


## Output signals

### Wheel speed

The ABS ECU informs the ASR ECU of the wheel speed. This is to allow the ASR to reduce the throttle opening in the event of wheelspin.

The signal enters the ECU as an incoming signal and is converted in the ABS ECU to a pwm signal.

Pins 9, 10, 11 and 12 are connected on cars with ASR.
Pin 9 = right rear
Pin 10 = left front
Pin 11 = right front
Pin 12 = left rear

The signal is an AC voltage, 0.15-0.70 V AC.

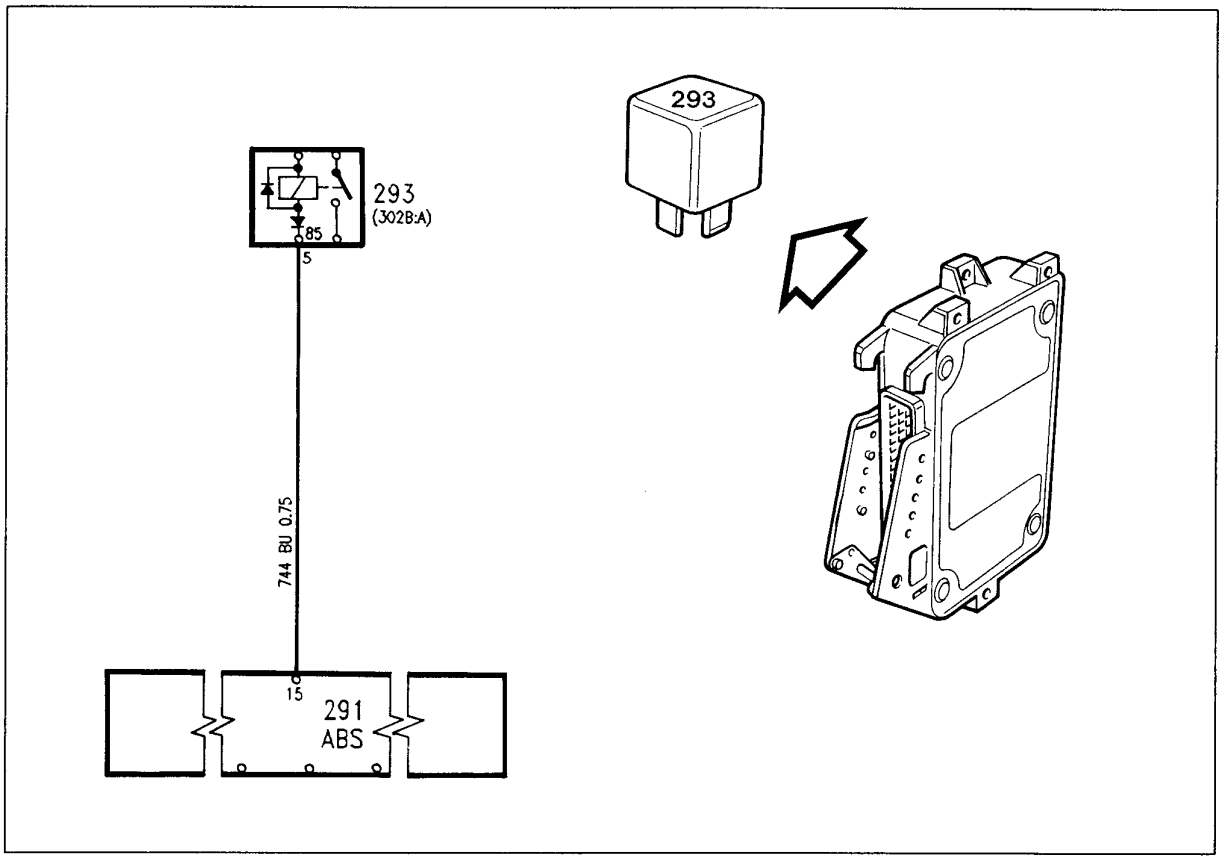


## Output signals

### Pump relay

The ECU activates the ABS pump relay when the brake system goes into the ABS mode through grounding at pin 15.

Activated pin 15 = 0 Volts
Non-activated pin 15 = 12 Volts.

The pump will run until the travel sensor informs the ECU that it has gone back 1 step from its original position.

The ECU is also activated for 30 msec the first time the car reaches 30 km/h after the ignition has been turned on. To complete self diagnosis, the ECU needs a speed signal from the pump motor.

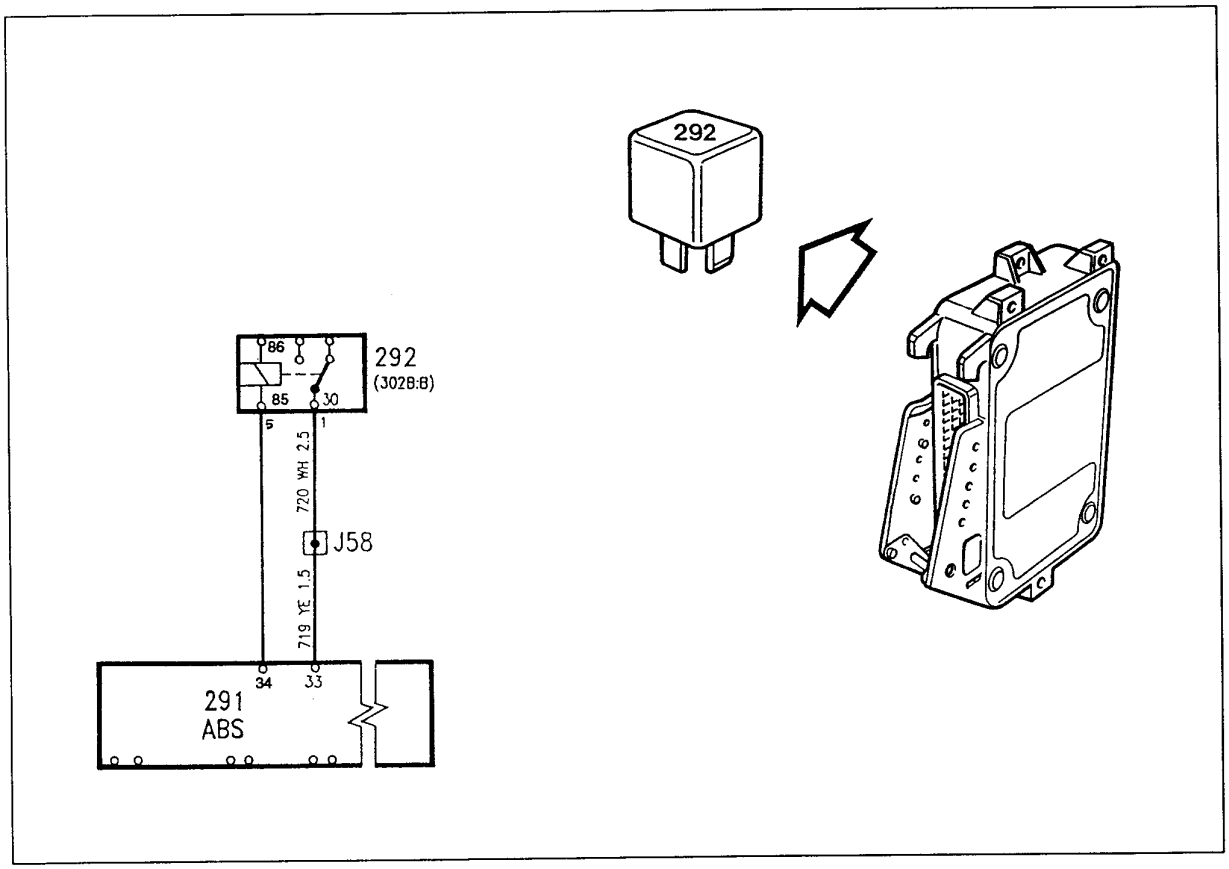


## Output signals

### Main relay

When the ignition is turned to +54, the ECU is activated through pin 53. The main relay will also be activated through pin 34.

Activated = 0 V

Non-activated = 12 V with +54

The ABS main relay will supply +12 V to:

- valve housing pins 1 and 10
- ECU pins 3 and 33
- pump relay pin 86 on relay

When the main relay is not activated, the ANTI LOCK light is grounded through the main relay to G 15.

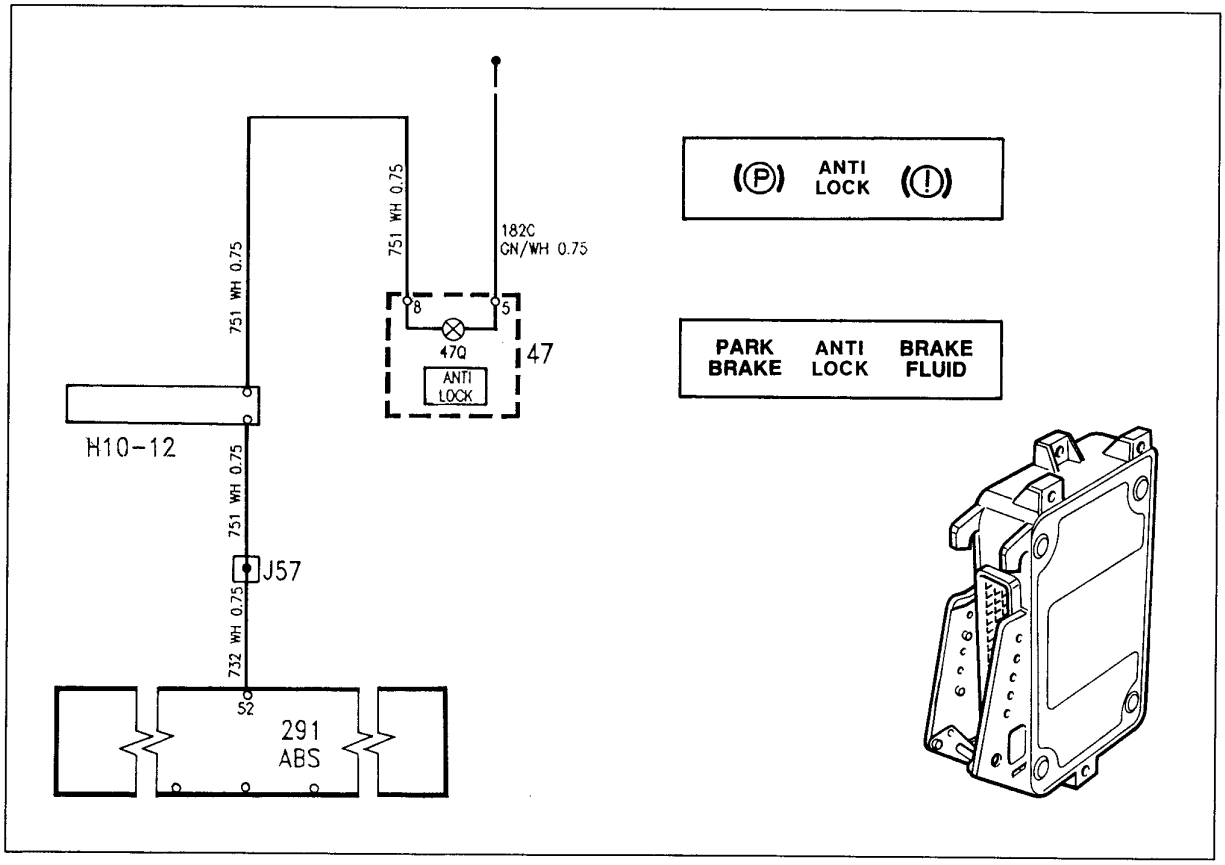


## Output signals

## ANTI LOCK light

The construction of the ANTI LOCK light differs in US and European models (see illustration above).

The ANTI LOCK light can be activated through diode 303A and the main relay if the ECU is disconnected or unserviceable.

Activated ECU:

The ANTI LOCK light will be activated through pin 52, which will ground the light.
The light receives +12 V from the 159 +15 terminal on the right-hand side of the glove box.

If the ANTI LOCK light comes on, ABS is switched off and ordinary power-assisted braking without ABS is obtained on the brakes.

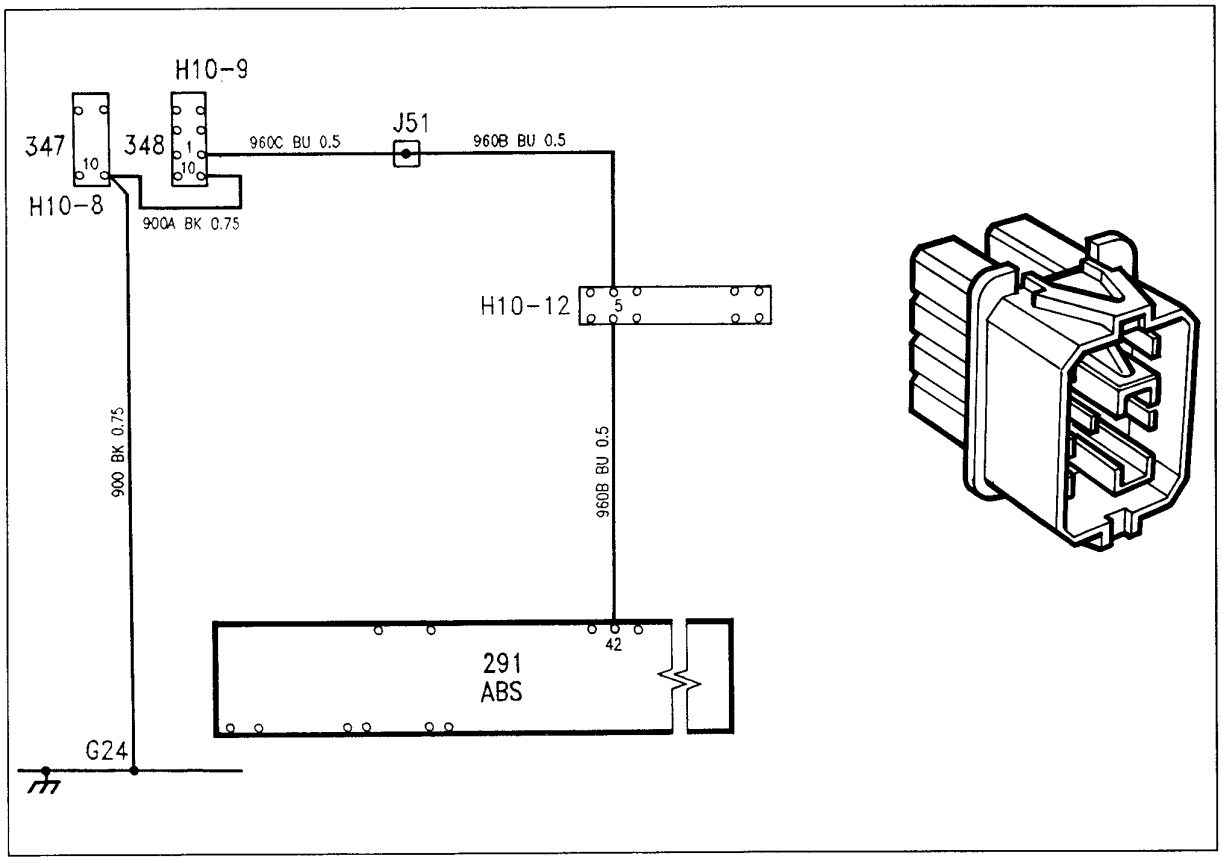


## Output signals

### ISAT

The ECU can communicate with the ISAT through pin 42. Lead K.

The communication will be shown as trouble codes and command codes on the ISAT display.

Connect the ISAT to the green connector, right-hand side no.3 ABS

## Locations of components

| | |
|---|---|
| 1 | Battery in the engine compartment |
| 22A | Fuse holder behind the access panel in the glove box |
| 47A | Fuel gauge |
| 47C | Coolant temperature gauge |
| 47Q | ABS/ABS-TCS warning lamp |
| 75 | Distribution block, positive battery supply, on the battery tray |
| 159 | Distribution terminal +15 in the electrical distribution box behind the glove box |
| 230 | Distribution terminal +30 in the electrical distribution box behind the glove box |
| 291 | ABS control unit on the battery tray |
| 292 | Main relay for ABS, in the engine compartment between the battery tray and the brake fluid reservoir, in the electrical distribution board (302B:B) |
| 293 | ABS pump relay, in the engine compartment in the electrical distribution box (302B:A) |
| 296 | Valve block, ABS |
| 298A | Left-hand front wheel sensor, on the left-hand steering knuckle housing |
| 298B | Right-hand front wheel sensor, on the left-hand steering knuckle housing |
| 298C | Left-hand rear wheel sensor, on the left-hand rear wheel hub |
| 298D | Right-hand rear wheel sensor, on the right-hand rear wheel hub |
| 302A | ABS fuse holder in the engine compartment on the bulkhead partition |
| 303A/ 303B | Diode, ABS, in the engine compartment, in the ABS electrical distribution box under the relay board, in the casing |
| 347 (H10-8) | Diagnostic test socket, engine electronics, under the right-hand front seat (black) |
| 348 (H10-9) | Diagnostic test socket, car electronics, under the right-hand front seat (green) |
| 427 | Motor for hydraulic pump (ABS/ ABS-ASR Mark IV) in the engine compartment on the brake unit |
| 428 | Pedal position transmistter (ABS/ ABS-ASR Mark IV) on the vacuum servo which is located on the bulkhead partition |

*2-pole connector*

| | |
|---|---|
| H2-46 | In the engine compartment behind the bulkhead partition on the extreme left |
| H2-47 | In the engine compartment behind the bulkhead partition on the extreme right |
| H2-48 | Under the rear seat on the left-hand side under the carpet |
| H2-49 | Under the rear seat on the right-hand side under the carpet |

*10-pole connector*

| | |
|---|---|
| H10-12 | In the engine compartment on the left, below the ABS 302 electrical distribution box |
| H10-17 | On the valve block |
| G2 | Earthing point, battery tray, on left-hand wheel housing |
| G15 | Earthing point, ABS, on the left-hand structuiral member, at the ABS control unit |

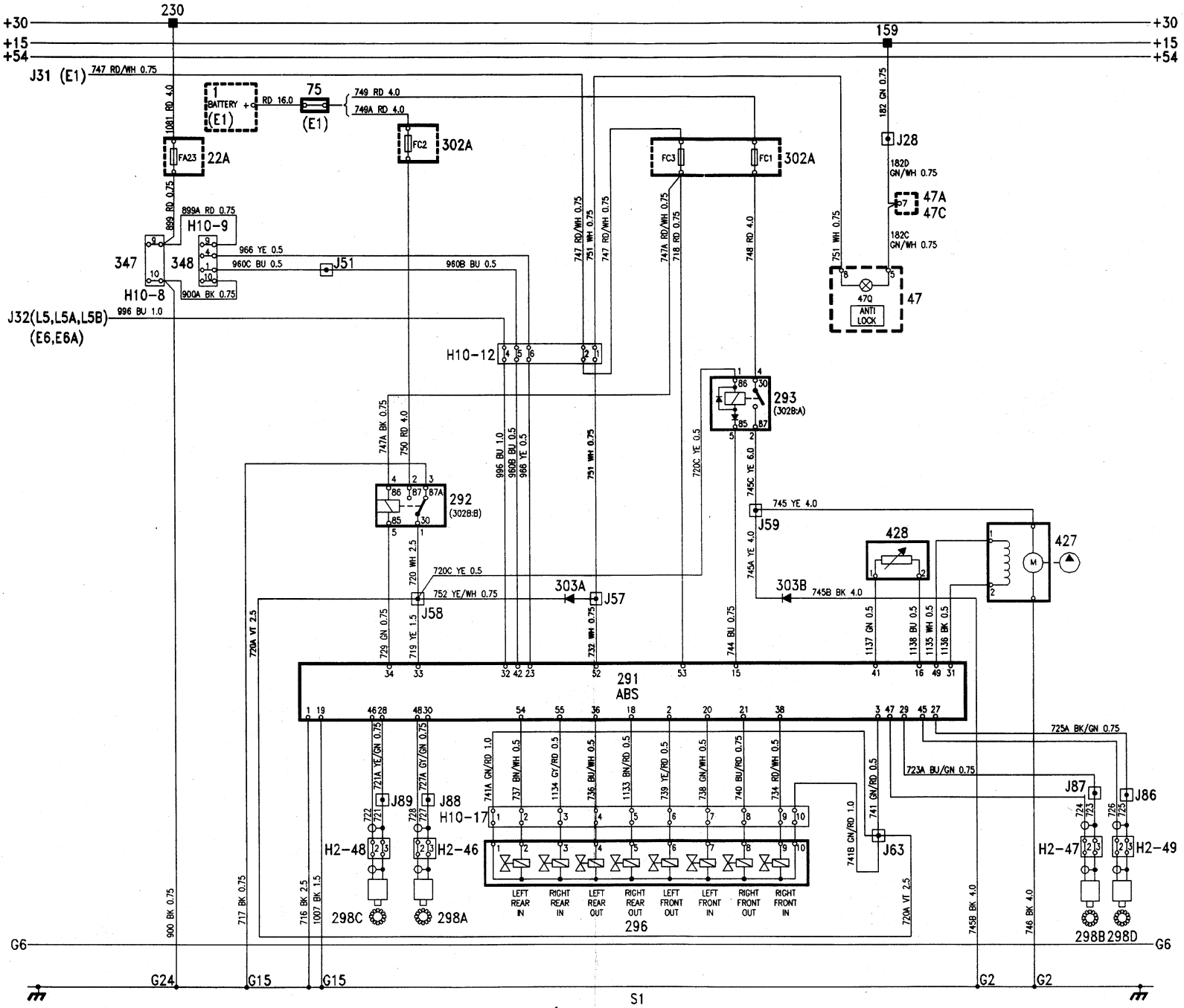
+30
+15
+54
230
159
J31 (E1)
747 RD/WH 0.75
1081 RD 4.0
1
BATTERY
(E1)
RD 16.0
75
(E1)
749 RD 4.0
749A RD 4.0
FC2
302A
FA23
22A
899 RD 0.75
899A RD 0.75
H10-9
347
348
H10-8
966 YE 0.5
960C BU 0.5
J51
960B BU 0.5
900A BK 0.75
J32(L5,L5A,L5B)
(E6,E6A)
996 BU 1.0
FC3
FC1
302A
182 GN 0.75
J28
182D
GN/WH 0.75
47A
47C
182C
GN/WH 0.75
751 WH 0.75
47Q
ANTI
LOCK
47
H10-12
293
(302B:A)
292
(302B:B)
747A BK 0.75
750 RD 4.0
996 BU 1.0
960B BU 0.5
966 YE 0.5
751 WH 0.75
720C YE 0.5
745C YE 6.0
745 YE 4.0
J59
428
427
745A YE 4.0
720C YE 0.5
752 YE/WH 0.75
J58
303A
J57
303B
745B BK 4.0
720A VT 2.5
729 GN 0.75
719 YE 1.5
732 WH 0.75
744 BU 0.75
1137 GN 0.5
1138 BU 0.5
1135 WH 0.5
1136 BK 0.5
291
ABS
725A BK/GN 0.75
723A BU/GN 0.75
741A GN/RD 1.0
737 BN/WH 0.5
1134 GY/RD 0.5
736 BU/WH 0.5
1133 BN/RD 0.5
739 YE/RD 0.5
738 GN/WH 0.5
740 BU/RD 0.75
734 RD/WH 0.5
741 GN/RD 0.5
741B GN/RD 1.0
J63
J87
J86
721A YE/GN 0.75
727A GY/GN 0.75
J89
J88
H10-17
H2-48
H2-46
H2-47
H2-49
LEFT REAR IN
RIGHT REAR IN
LEFT REAR OUT
RIGHT REAR OUT
LEFT FRONT OUT
LEFT FRONT IN
RIGHT FRONT OUT
RIGHT FRONT IN
296
298C
298A
298B
298D
900 BK 0.75
717 BK 0.75
716 BK 2.5
1007 BK 1.5
720A VT 2.5
745B BK 4.0
746 BK 4.0
G6
G24
G15
G15
G2
G2
S1
LÅSNINGSFRITT BROMSSYSTEM
ANTI BLOCKING BRAKE SYSTEM
018 0261
A

## Locations of components

| | |
|---|---|
| 47A | Fuel gauge |
| 47C | Coolant temperature gauge |
| 47Q | ABS/ABS-TCS warning lamp |
| 75 | Distribution block, positive battery supply, on the battery tray |
| 159 | Distribution terminal +15 in the electrical distribution box behind the glove box |
| 230 | Distribution terminal +30 in the electrical distribution box behind the glove box |
| 291 | ABS control unit on the battery tray |
| 292 | Main relay for ABS, in the engine compartment between the battery tray and the brake fluid reservoir, in the electrical distribution board (302B:B) |
| 293 | ABS pump relay, in the engine compartment in the electrical distribution box (302B:A) |
| 296 | Valve block, ABS |
| 298A | Left-hand front wheel sensor, on the left-hand steering knuckle housing |
| 298B | Right-hand front wheel sensor, on the left-hand steering knuckle housing |
| 298C | Left-hand rear wheel sensor, on the left-hand rear wheel hub |
| 298D | Right-hand rear wheel sensor, on the right-hand rear wheel hub |
| 302A | ABS fuse holder in the engine compartment on the bulkhead partition |
| 303A/ 303B | Diode, ABS, in the engine compartment, in the ABS electrical distribution box under the relay board, in the casing |
| 347 (H10-8) | Diagnostic test socket, engine electronics, under the right-hand front seat (black) |
| 348 (H10-9) | Diagnostic test socket, car electronics, under the right-hand front seat (green) |
| 427 | Motor for hydraulic pump (ABS/ ABS-ASR Mark IV) in the engine compartment on the brake unit |
| 428 | Pedal position transmistter (ABS/ ABS-ASR Mark IV) on the vacuum servo which is located on the bulkhead partition |

*2-pole connector*

| | |
|---|---|
| H2-46 | In the engine compartment behind the bulkhead partition on the extreme left |
| H2-47 | In the engine compartment behind the bulkhead partition on the extreme right |
| H2-48 | Under the rear seat on the left-hand side under the carpet |
| H2-49 | Under the rear seat on the right-hand side under the carpet |

*10-pole connector*

| | |
|---|---|
| H10-12 | In the engine compartment on the left, below the ABS 302 electrical distribution box |
| H10-17 | On the valve block |
| G2 | Earthing point, battery tray, on left-hand wheel housing |
| G15 | Earthing point, ABS, on the left-hand structuiral member, at the ABS control unit |
| G24 | Earthing point, on the right-hand front seat member |

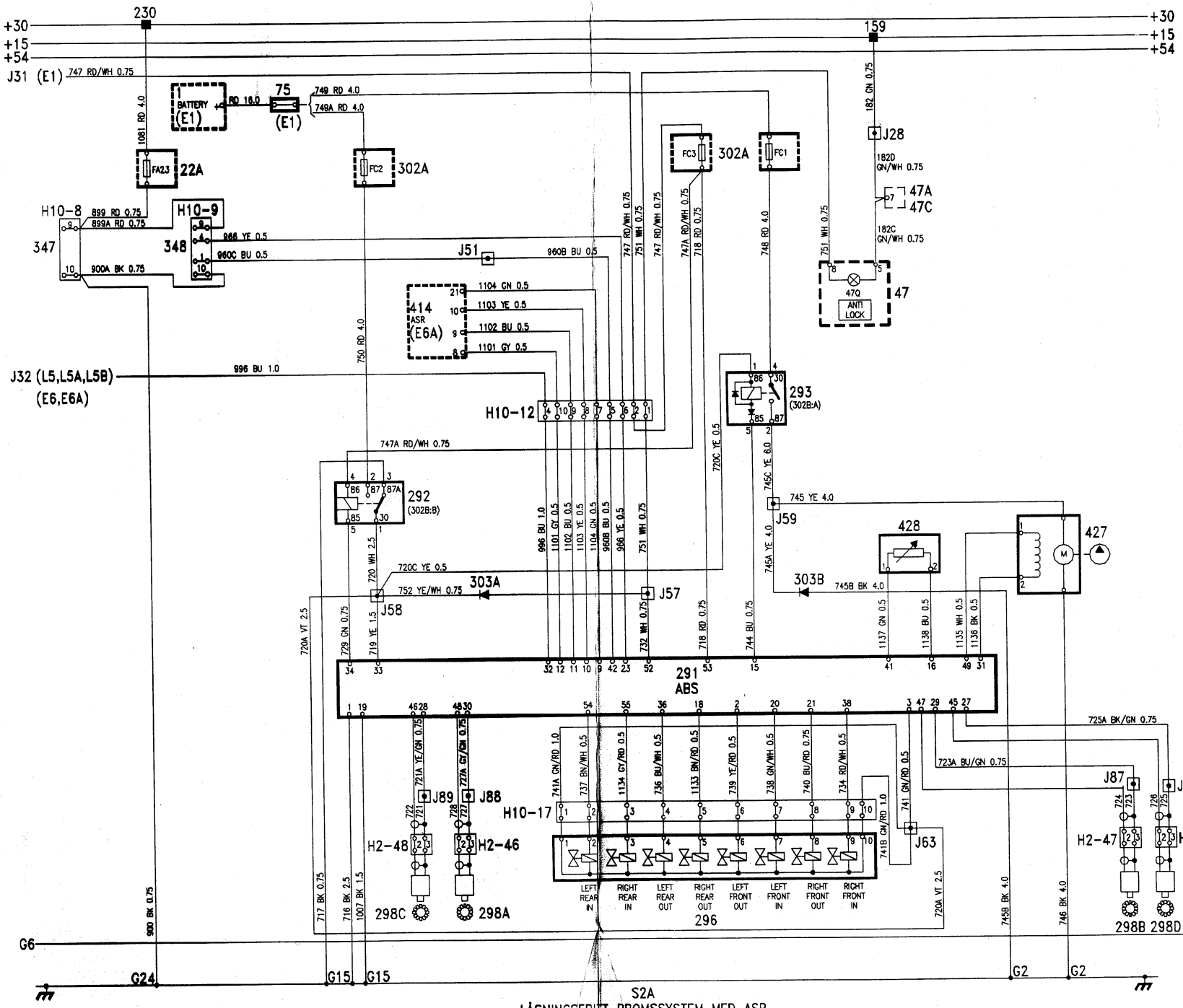
+30
+15
+54
J31 (E1)
230
159
BATTERY (E1)
75 (E1)
FA23 22A
FC2 302A
FC3 302A
FC1
J28
47A
47C
47Q
ANTI LOCK
47
H10-8
347
H10-9
348
J51
414 ASR (E6A)
J32 (L5,L5A,L5B) (E6,E6A)
H10-12
293 (302B:A)
292 (302B:B)
J59
428
427
303A
303B
J57
J58
291 ABS
J89
J88
H10-17
J63
J87
J86
H2-48
H2-46
H2-47
H2-49
298C
298A
296
298B
298D
G6
G24
G15
G2
S2A
LÅSNINGSFRITT BROMSSYSTEM MED ASR
ANTI BLOCKING BRAKE SYSTEM WITH ASR
018 0302
A

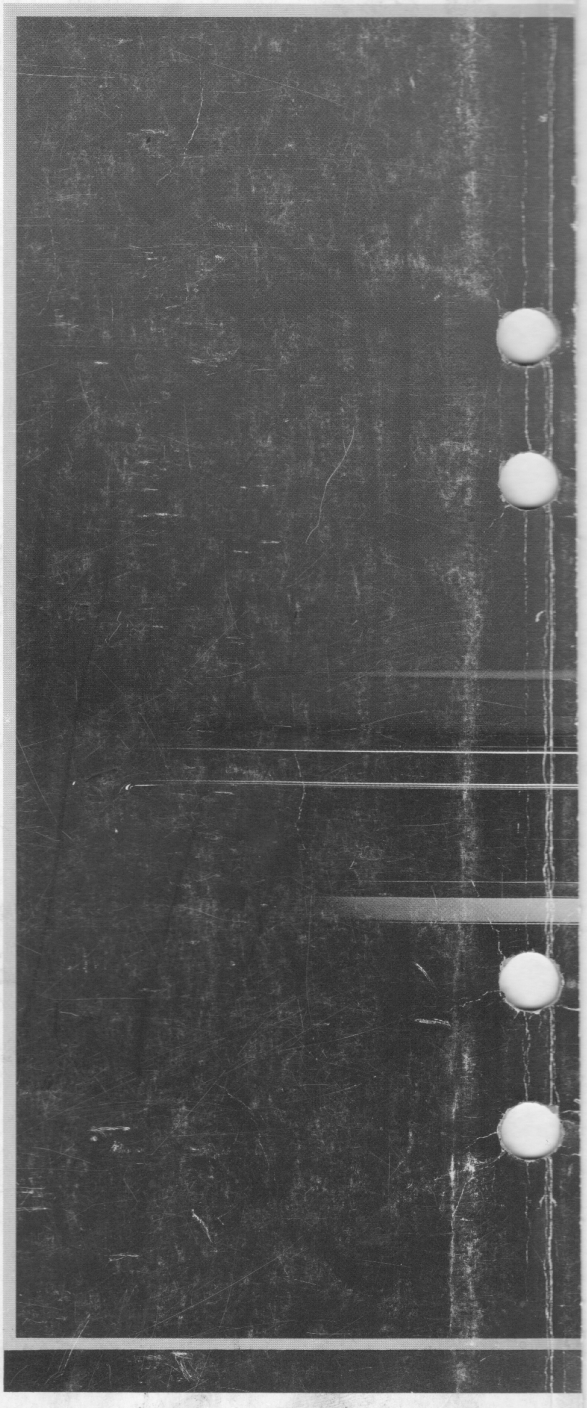

US Ordering no. **347013.** American edition. Printed in Sweden. 

Saab Automobile AB
Trollhättan, Sweden

Printed in Sweden, Graphic Systems AB, Gbg 1992.19522