Saab 9000

Service Manual

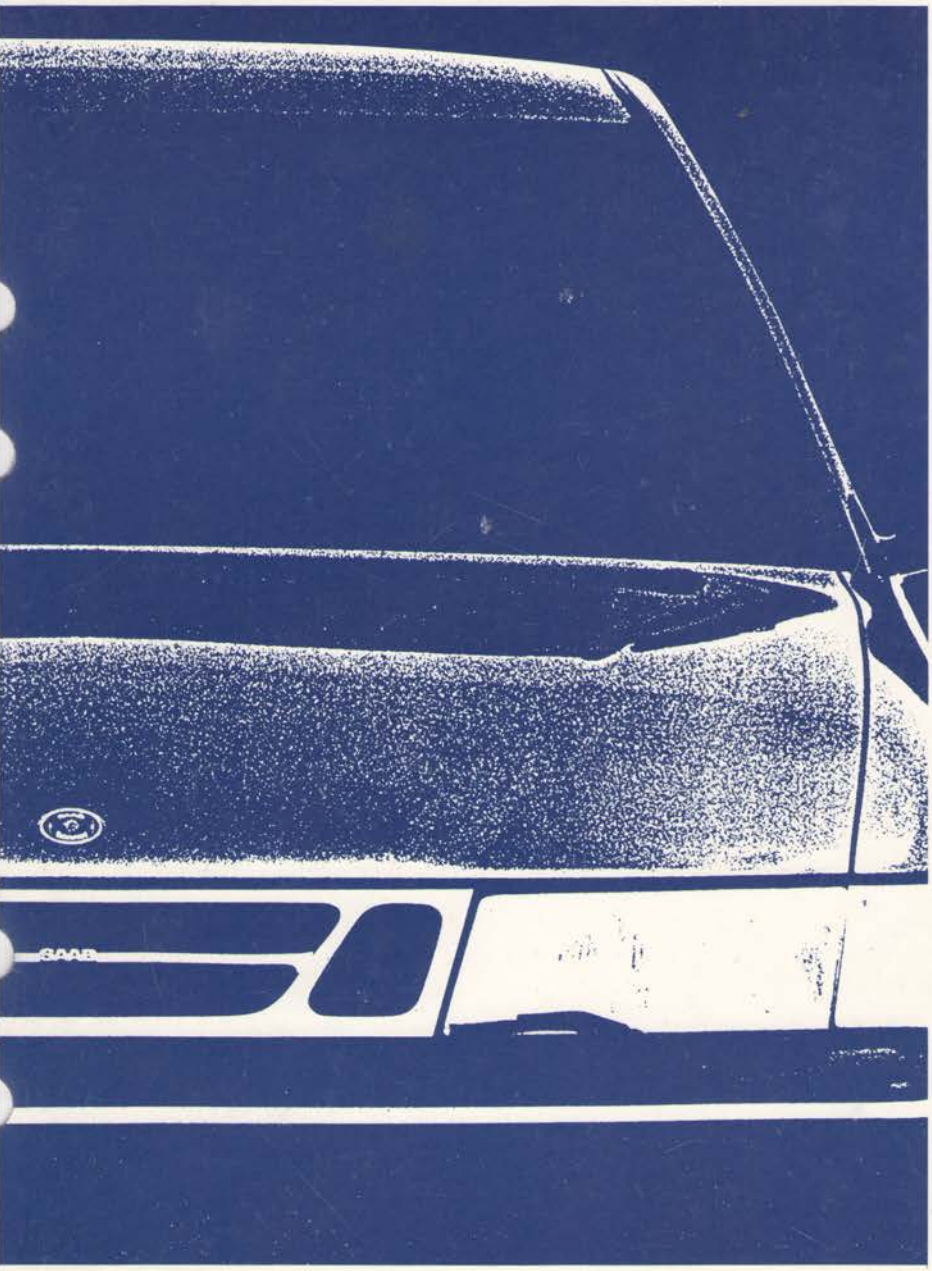

M 1985–95

ENG

2:3 Fuel and air induction system

Saab 9000

SERVICE MANUAL

2:3 Fuel and air induction system M1985– 1995

Foreword
This service manual replaces:

- Parts of service manual 2:3 LH Fuel injection system M1985– 1989–
- Service Information 234–030
  234–1057
  234–1156
  234–1157
  234–1257
  234–1361

We reserve the right to make changes without notice.

Saab Automobile AB

Warning, Important and Note

The headings "Warning", "Important" and "Note" occur from time to time in the Service Manual. They are used to draw the attention of the reader to information of special interest and seriousness. The importance of the information is indicated by the three different headings and the difference between them is explained below.

⚠ WARNING

Warns of the risk of material damage and grave injury to mechanics and the driver, as well as serious damage to the car.

Important

Points out the risk of minor damage to the car and also warns the mechanic of difficulties and time-wasting mistakes.

Note

Hints and tips on how the work can be done in a way that saves time and labour. This information is not supplied for reasons of safety.

Market codes

The codes refer to market specifications

AT	Austria	GB	Great Britain
AU	Australia	GR	Greece
BE	Belgium	IS	Iceland
CA	Canada	IT	Italy
CH	Switzerland	JP	Japan
DE	Germany	ME	Middle East
DK	Denmark	NL	Netherlands
ES	Spain	NO	Norway
EU	Europe	SE	Sweden
FE	Far East	US	USA
FI	Finland	UC	US California
FR	France		

Production: Service Support, Saab Automobile AB, Trollhättan, Sweden

Technical data

Engine management system

For information about Trionic and Motronic engine management systems, see service manuals.

Fuel pressure B202i, B204i, B234i

System pressure	bar (psi)	3,0 (43)
Residual pressure (after 20 mins)	bar (psi)	about 2.3 (33)

Fuel pressure B202LTT, B234LTT

System pressure	bar (psi)	3,0 (43)
Residual pressure (after 20 mins)	bar (psi)	min 2.3 (33)

Fuel pressure B202T, M1985–86

System pressure	bar (psi)	2,5 (36)
Residual pressure (after 20 mins)	bar (psi)	about 1.8 (26)

Fuel pressure B202T, M1987–

System pressure	bar (psi)	2,8 (40)
Residual pressure (after 20 mins)	bar (psi)	min 2.1 (30)

Fuel pressure B234T

System pressure	bar (psi)	3,0 (43)
Residual pressure (after 20 mins)	bar (psi)	about 2.3 (33)

Fuel pressure V6

System pressure	bar (psi)	3,0 (43)
Residual pressure (after 20 mins)	bar (psi)	min 2.3 (33)

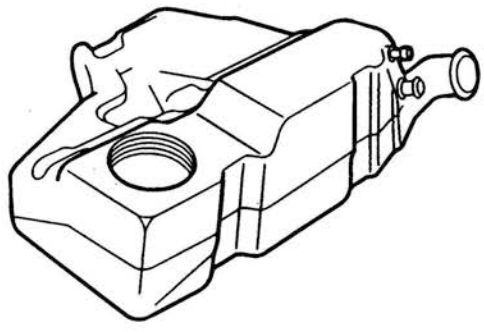

Fuel tank

Total volume, year models 1985–1989	liters (qts)	68 (71)
year models 1990, 1992–	liters (qts)	66 (69)
year model 1991	liters (qts)	62 (65)
Volume when fuel lamp starts to light	liters (qts)	about 10 (10.6)

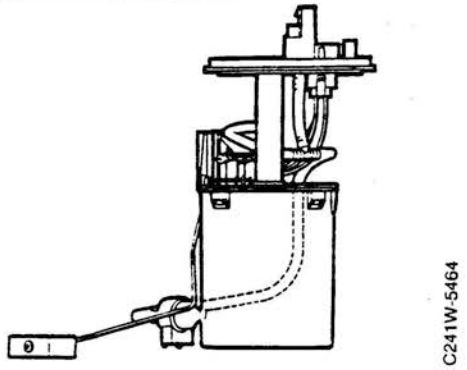

Fuel pump

Walbro

Capacity at 3.0 bar counterpressure	l/30 s	min 0.7
Resistance **M1990–M1991**, fuel level sensor full tank	Ohms	340–360
Resistance **M1990–M1991** fuel level sensor empty tank	Ohms	30–40
Resistance **M1992–M1995–**, fuel level sensor full tank	Ohms	360–380
Resistance **M1992–M1995–** fuel level sensor empty tank	Ohms	28–38

Bosch

Capacity at 2.5–3.0 bar counterpressure	l/30 s	min 0.9
Resistance, fuel level sensor full tank	Ohms	2,6–3,8
Resistance, fuel level sensor empty tank	Ohms	68,2–69,2

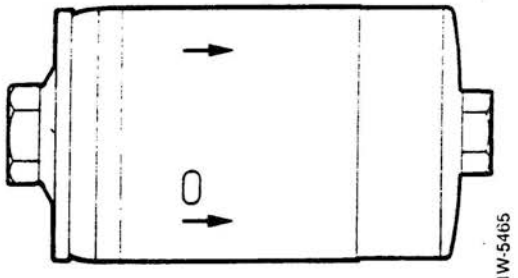

Fuel filter

Filter volume	liters	0,6
Average porosity of paper insert		5 µm

Fuel pressure regulator, test readings

		Turbo –1986	Turbo 1987–	B202i 1986– B234 1990– B204 1994– B202LTT B234LTT	V6
System pressure	bar (psi)	2.5 (36)	2.8 (40)	3.0 (43)	3.0(43)
+0.2 (+2.9) +0.4 (5.8) +0.6 (8.6)		2.7 (39) 2.9 (42) 3.1 (45)	3.0 (43) 3.2 (46) 3.4 (49)	3.2 (46) 3.4 (49) 3.6 (52)	
barometric pressure	bar (psi)	2.5 (36)	2.8 (40)	3.0 (43)	
–0.6 (8.6) –0.4 (5.8) –0.2 (2.9)		1.9 (28) 2.1 (30) 2.3 (33)	2.2 (32) 2.4 (35) 2.6 (37)	2.4 (35) 2.4 (35) 2.8 (40)	

Tolerance range:
2.5 + 0.25/–0.15 bar (36 + 3.6/–2.3 psi)
2.8 + 0.25/–0.15 bar (40 + 3.6/ 2.3 psi)
3.0 + 0.25/–0.15 bar (43 + 3.6/–2.3)

Injectors, flow capacity

LH

Fuel pressure regulator, opening pressure (bar)	2.5 Turbo –86	2.8 Turbo 87–	3.0 i/S	3.0 Turbo
Flow capacity ml/30s	104	110	90	145

Trionic

Flow capacity, aspirating engine	ml/30s	127 ± 10
Flow capacity, turbo engine	ml/30s	176 ± 14

Motronic

Flow capacity	ml/30s	109 ± 9

Special tools

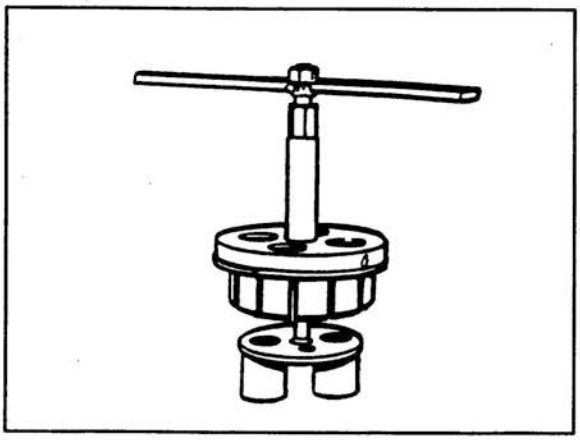

83 94 397 Wrench, fuel pump (Walbro) M1988–89.

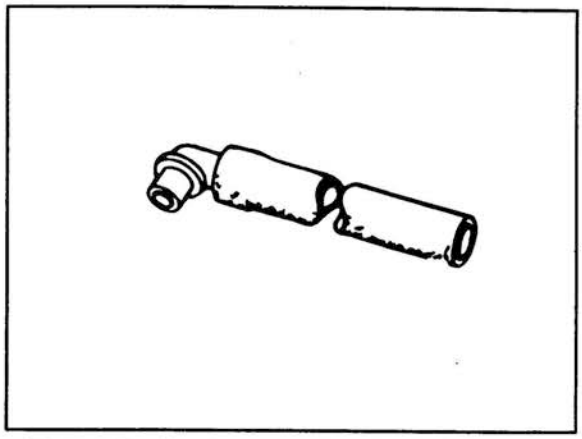

83 94 405 Test hose for checking fuel flow.

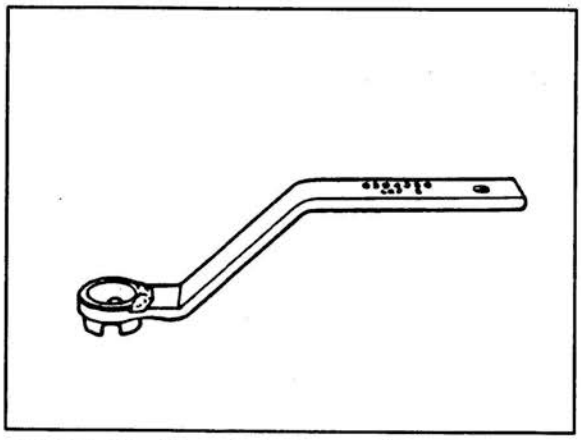

83 94 330 Wrench, fuel pump (Bosch)

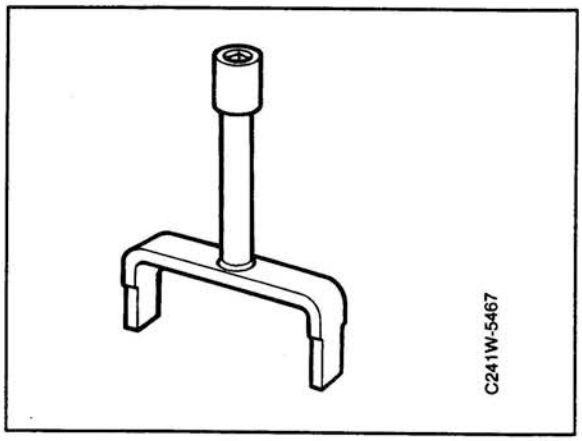

83 94 462 Wrench, fuel pump (Walbro) M1990–

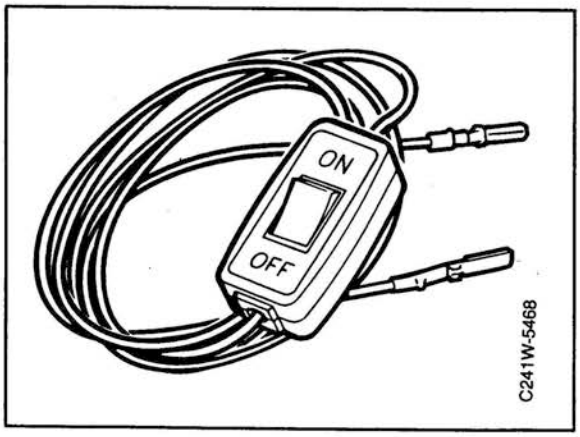

83 93 886 Diagnostics cable

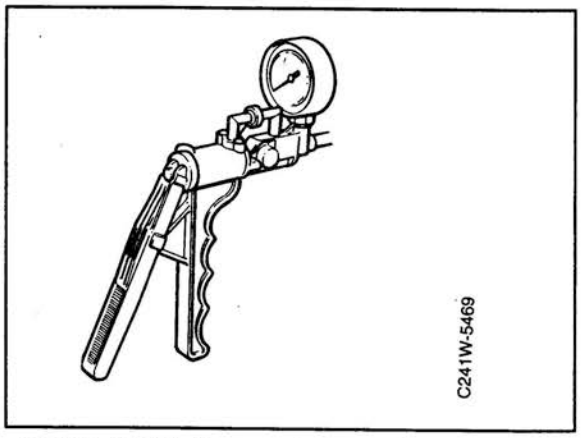

(45) 30 14 883 Pressure tester

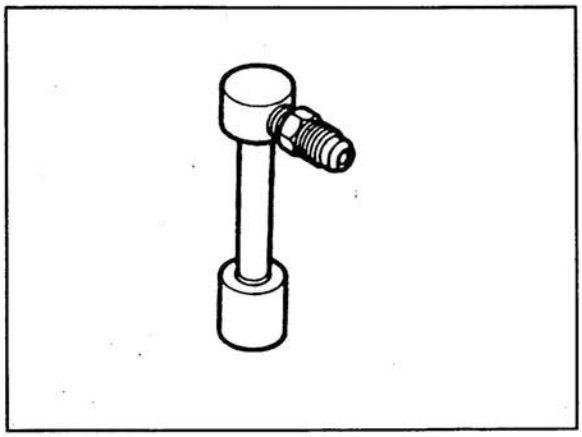

83 95 121 Extension, fuel pressure adaptor, V6

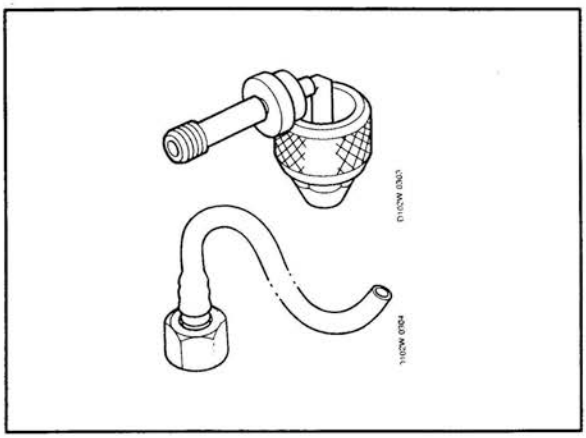

83 94 744 Adapter, fuel pressure and fuel flow, V6.

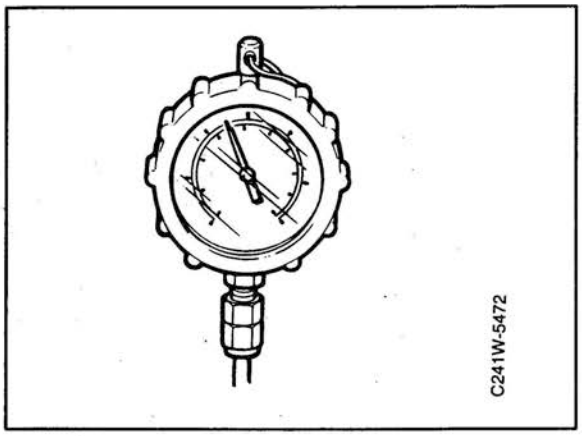

83 93 852 Measuring equipment, fuel pressure
83 93 860 Hose kit (spare part)
83 93 878 Nipple (spare part)

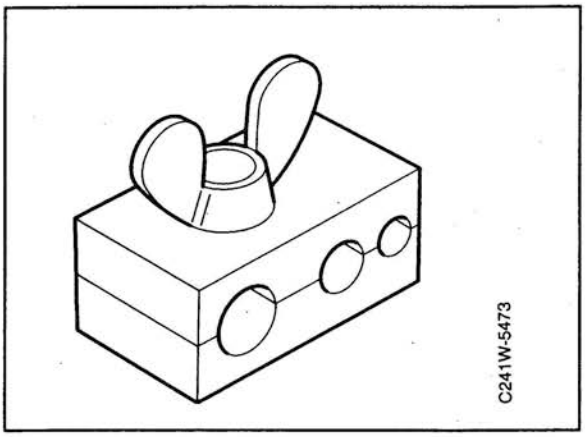

83 94 546 Installation tool, fuel line.

Technical description

Engine management system

General

The Saab 9000 engine management systems use an electric fuel pump to draw fuel from the fuel tank and generate fuel pressure in the system. The pressure level is determined by the pressure regulator, which keeps fuel pressure constant in relation to the pressure in the engine's air intake (4 cylinder engines only). The quantity of fuel injected is therefore governed only by time the injector is open and not by pressure variations in the intake manifold.
The fuel is injected by injectors (solenoid valves) mounted in the intake manifold near the inlet valves and connected to a common fuel rail.
Injector opening time is controlled by electrical control pulses from the control module.
For detailed description of the engine management system, see the service manual for each system.

Air induction system 4 cyl turbo engine, manual gearbox, until M1987 4 cyl i/S until M1988

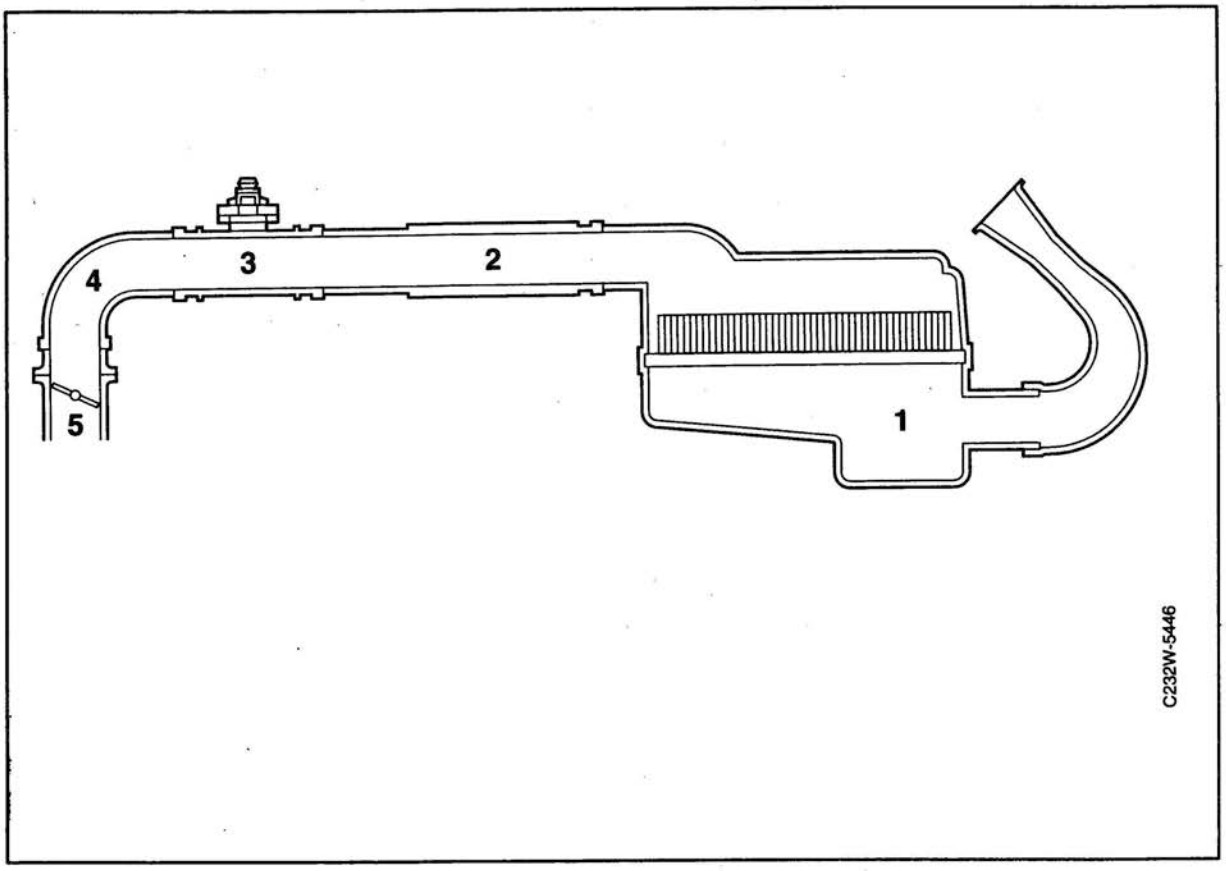

1. Air cleaner
2. Connecting pipe
3. Mass air flow sensor
4. Rubber gaiter
5. Throttle body

The induction system consists of air cleaner, connecting pipe (i/S), mass air flow sensor and rubber gaiter. The induction system is connected to the throttle body.

The quantity of air used by the engine passes through the induction system where a filter removes dust particles.

The air cleaner (air collection chamber) also functions as an intake air silencer.

The mass air flow sensor measures the mass of air consumed by the engine. The signal from the mass air flow sensor is processed by the control module which monitors the engine's fuel mixture requirement.

Air induction system 4 cyl, turbo engine M1988– 4 cyl i/S M1989–

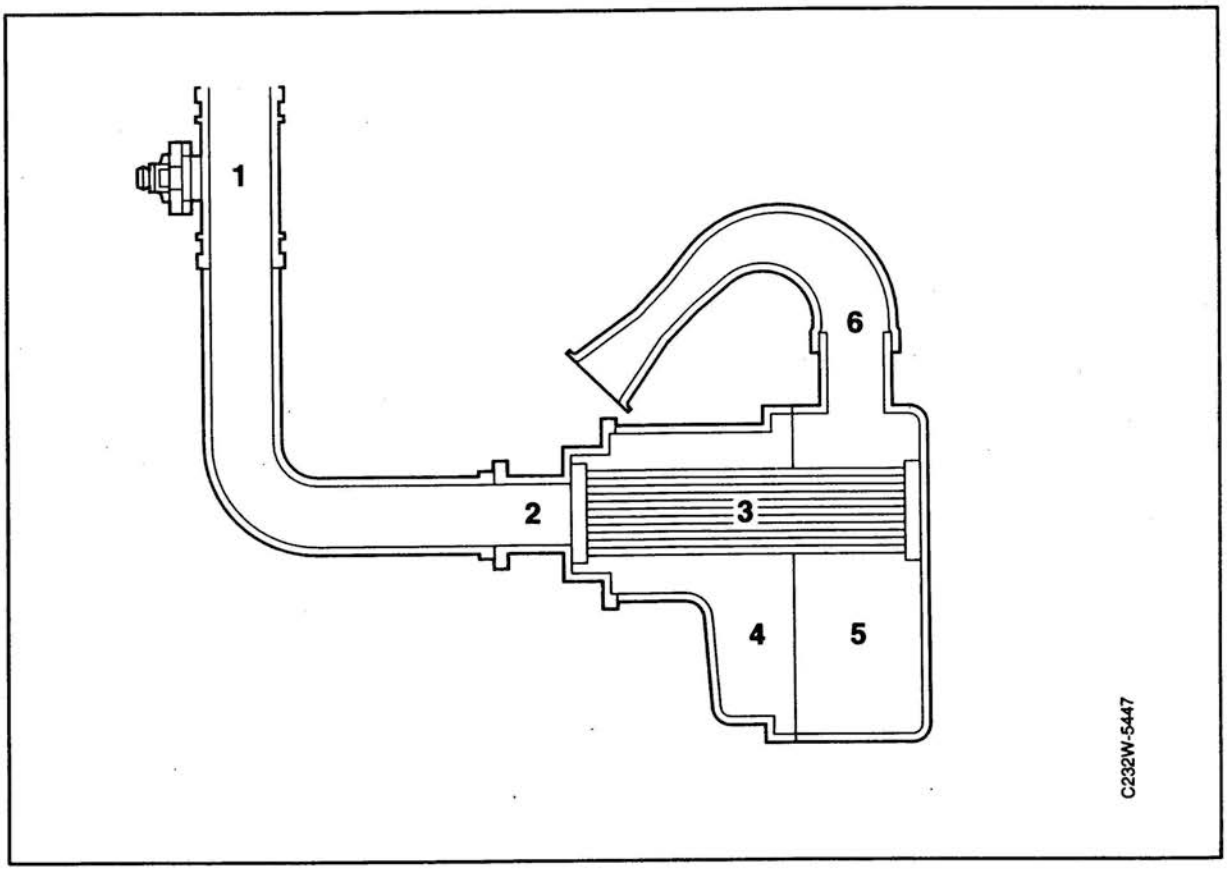

1. Mass air flow sensor
2. Plastic pipe (connecting pipe)
3. Filter cartridge
4. Inner air cleaner housing
5. Outer air cleaner housing
6. Air pipe

The induction system consists of air cleaner, mass air flow sensor, filter and air cleaner housing.

The quantity of air used by the engine passes through the induction system where a filter removes dust particles.

The air cleaner (air collection chamber) also functions as an intake air silencer. The mass air flow sensor measures the composition of air consumed by the engine.

The signal from the mass air flow sensor is processed by the control module which monitors the engine's fuel mixture requirement.

The filter element is mounted in the left–hand wheel housing.

Air induction system V6 M1995–

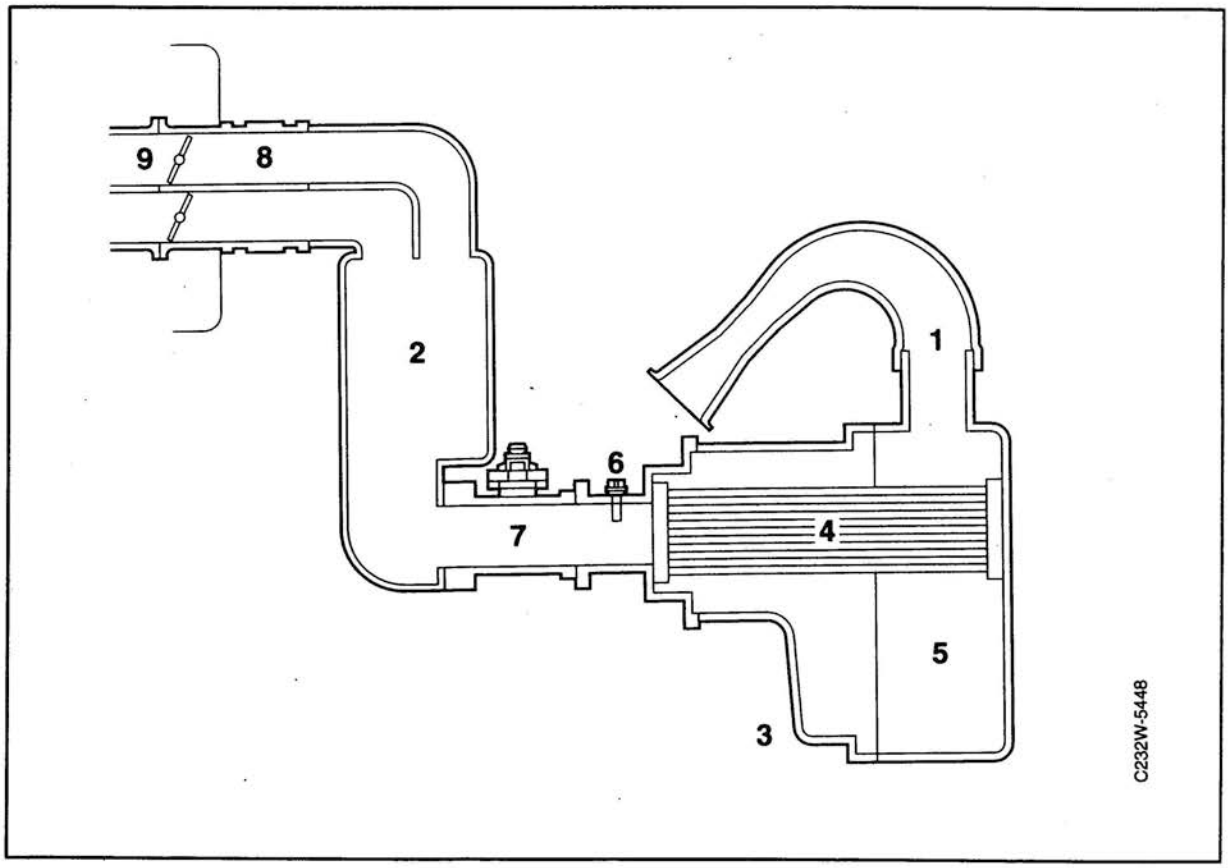

1. Air intake pipe
2. Resonator
3. Air cleaner consisting of:
4. Filter element
5. Air collection chamber
6. Intake air temperature sensor
7. Mass air flow sensor
8. Connecting hose
9. Throttle butterfly

The induction system consists of air intake pipe with resonator (sound–absorbing plastic chamber), air cleaner, rubber elbow, mass air flow sensor and connecting hose. The induction system is connected to the throttle body.

The quantity of air used by the engine passes through the induction system where a filter removes dust particles.

The V6 has a variable induction system. For further information on this and on the mass air flow sensor, see service manual 2:7 Engine Management System.

Fuel system, B202

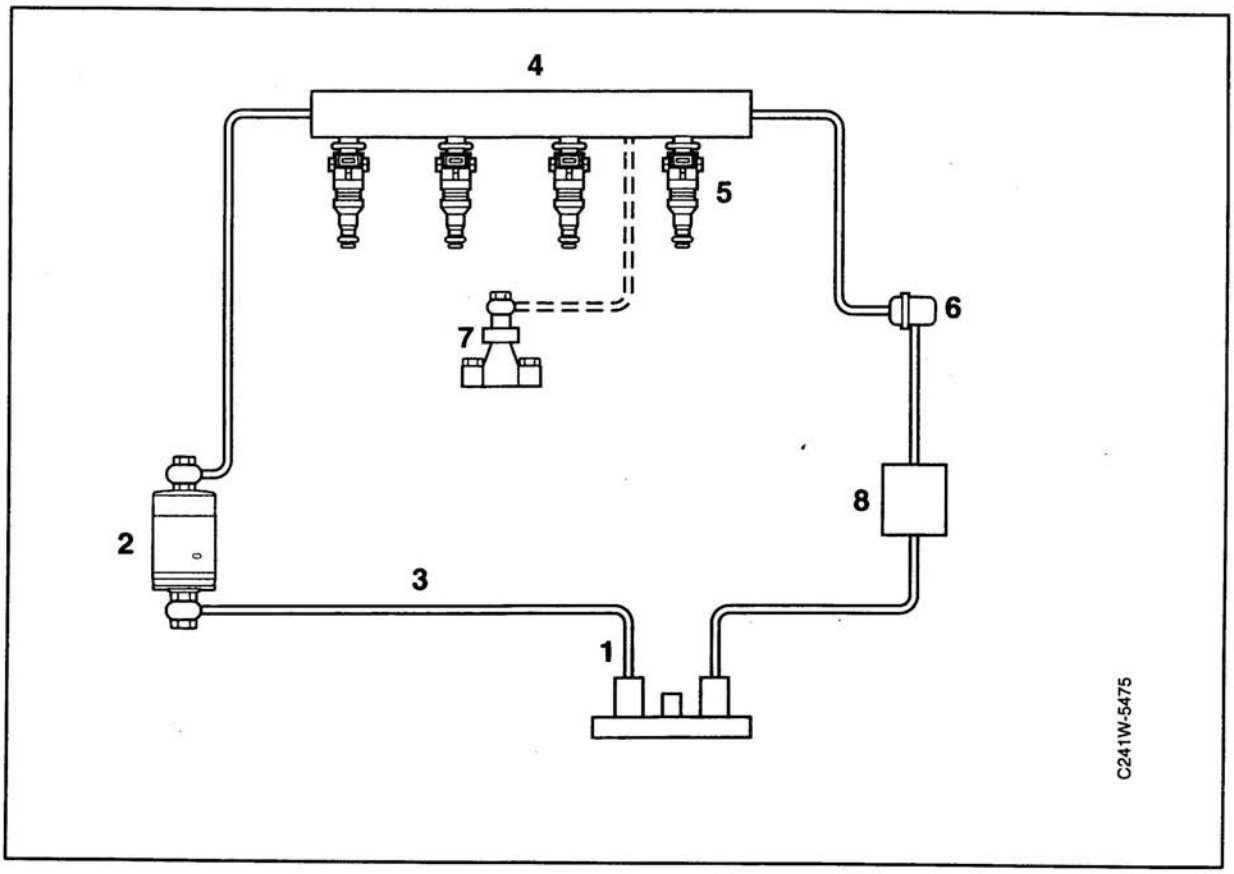

1. Fuel pump
2. Fuel filter
3. Fuel line
4. Fuel rail
5. Injector
6. Pressure regulator
7. Cold–starting valve (certain versions only)
8. Roll–over valve (M1985–88 only)

Fuel system, B234 i/T

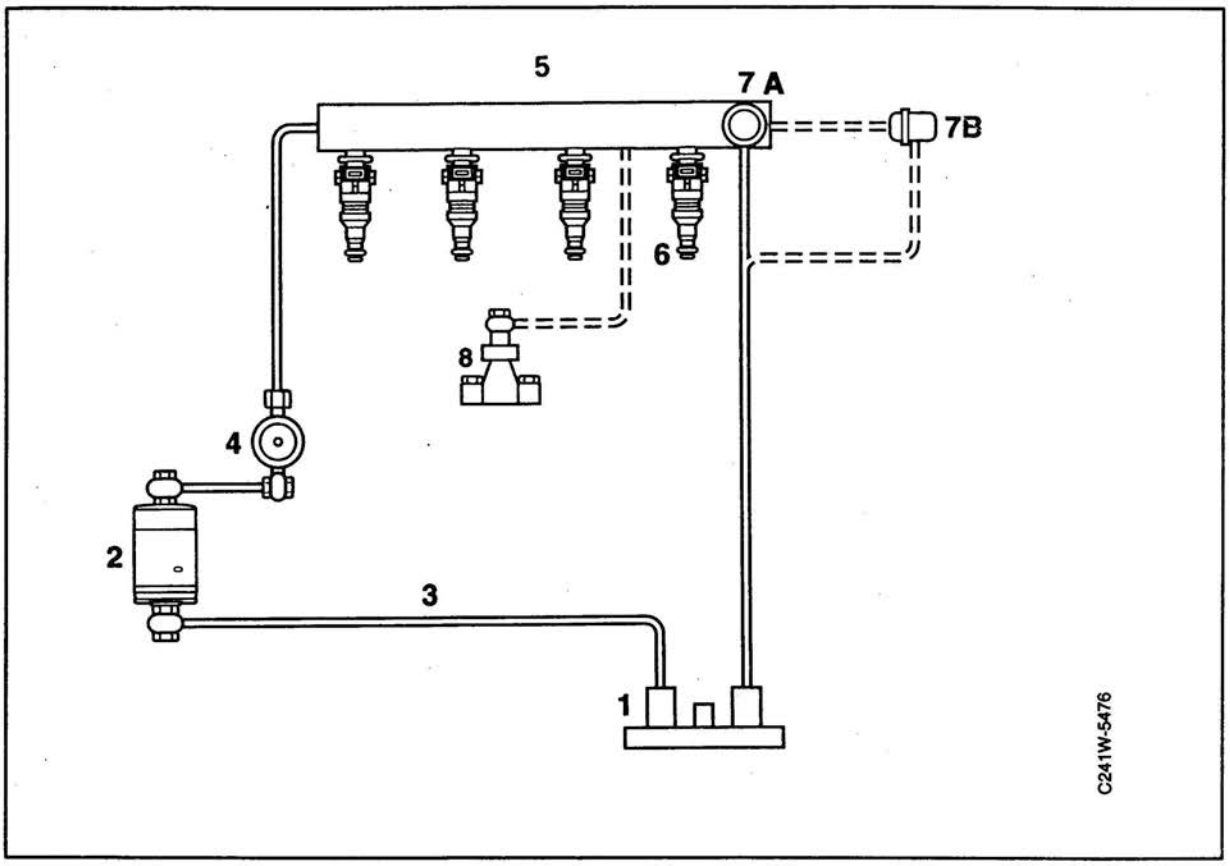

1. Fuel pump
2. Fuel filter
3. Fuel line
4. Pulsator
5. Fuel rail
6. Injector
7. Pressure regulator
   A=Turbo engines
   B=i engines
8. Cold–starting valve
   (certain versions only)

Fuel pump assemblies

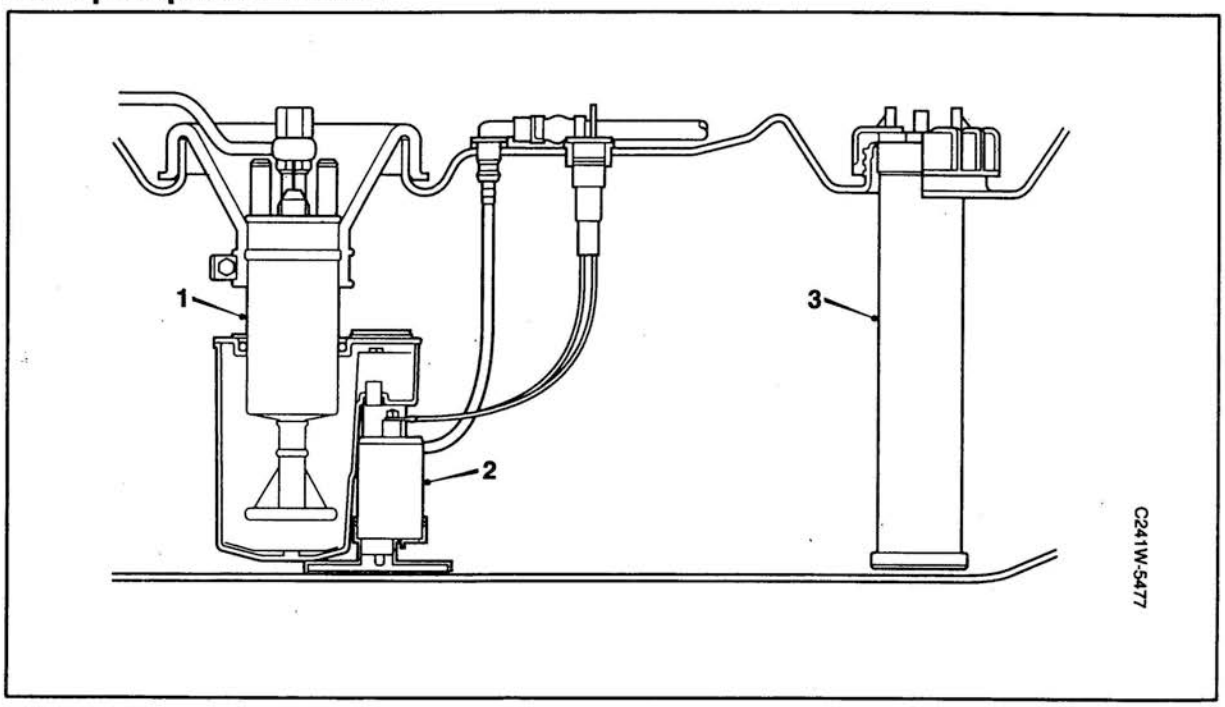

Bosch M85–M88

1. Fuel pump
2. Feed pump
3. Fuel level sensor

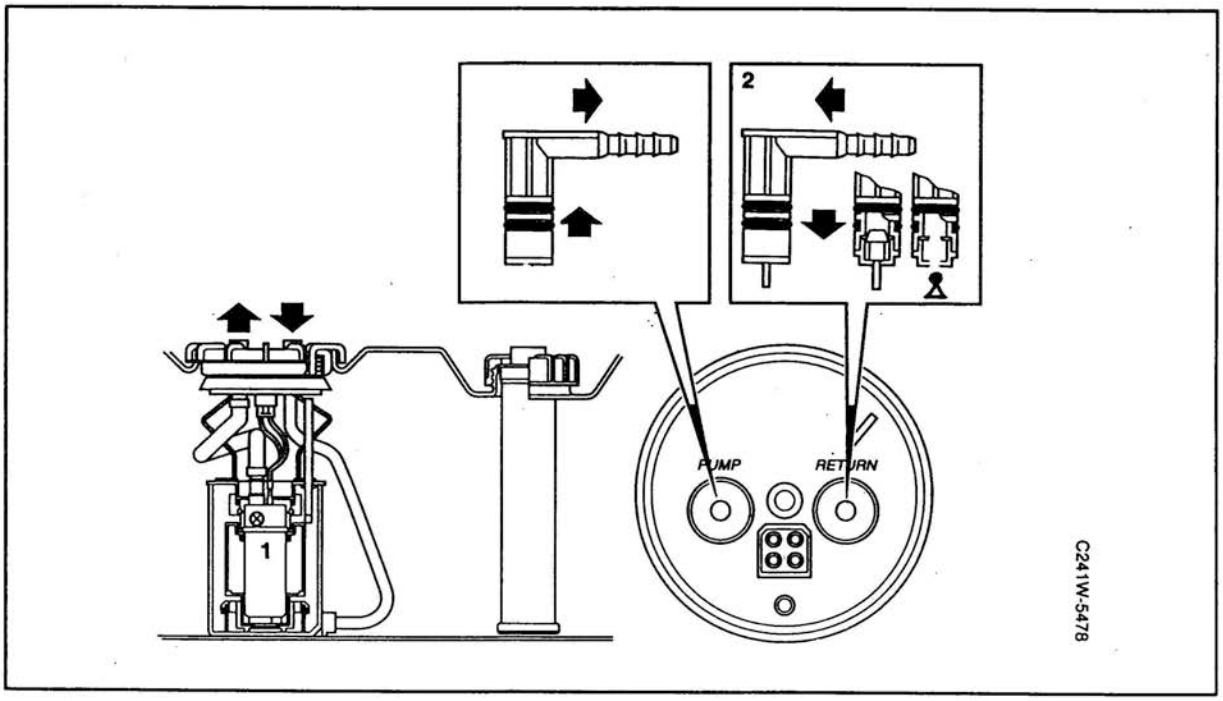

Walbro, negative ejector

1. Non–return valve in pump unit
2. Two versions of roll–over valve in return line

Fuel pump assemblies (contd.)

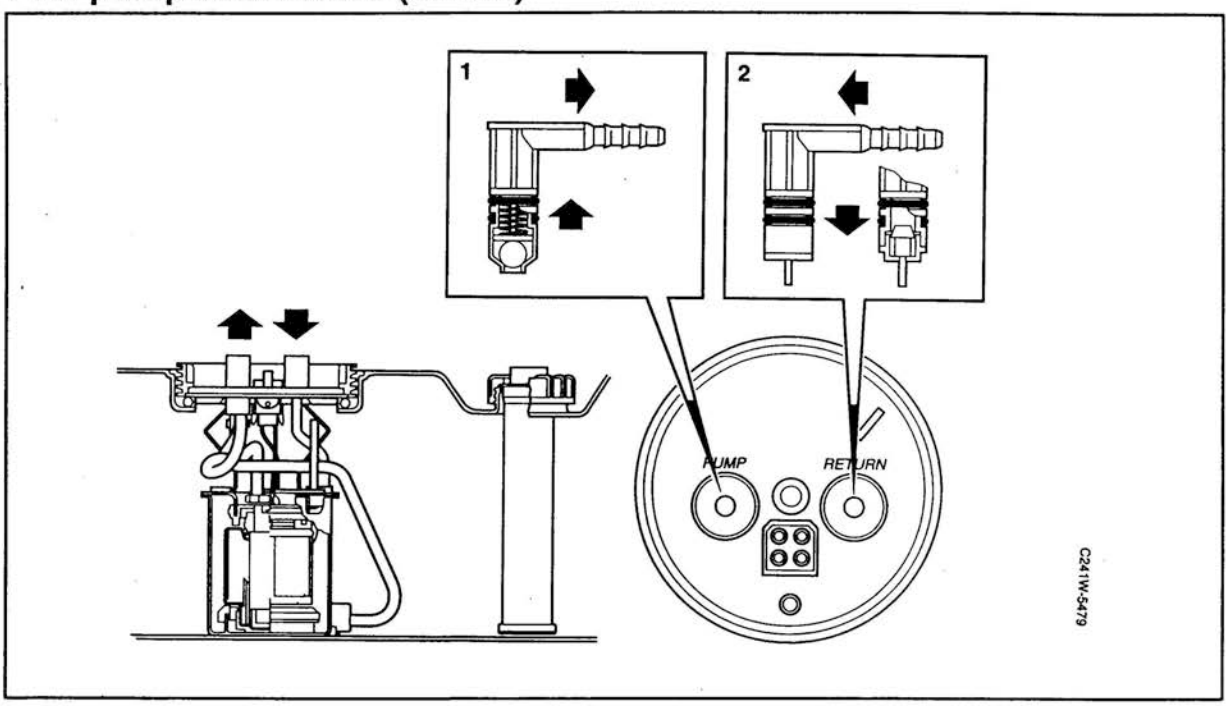

Walbro, positive ejector

1. Non–return valve in feed line
2. Roll–over valve in return line

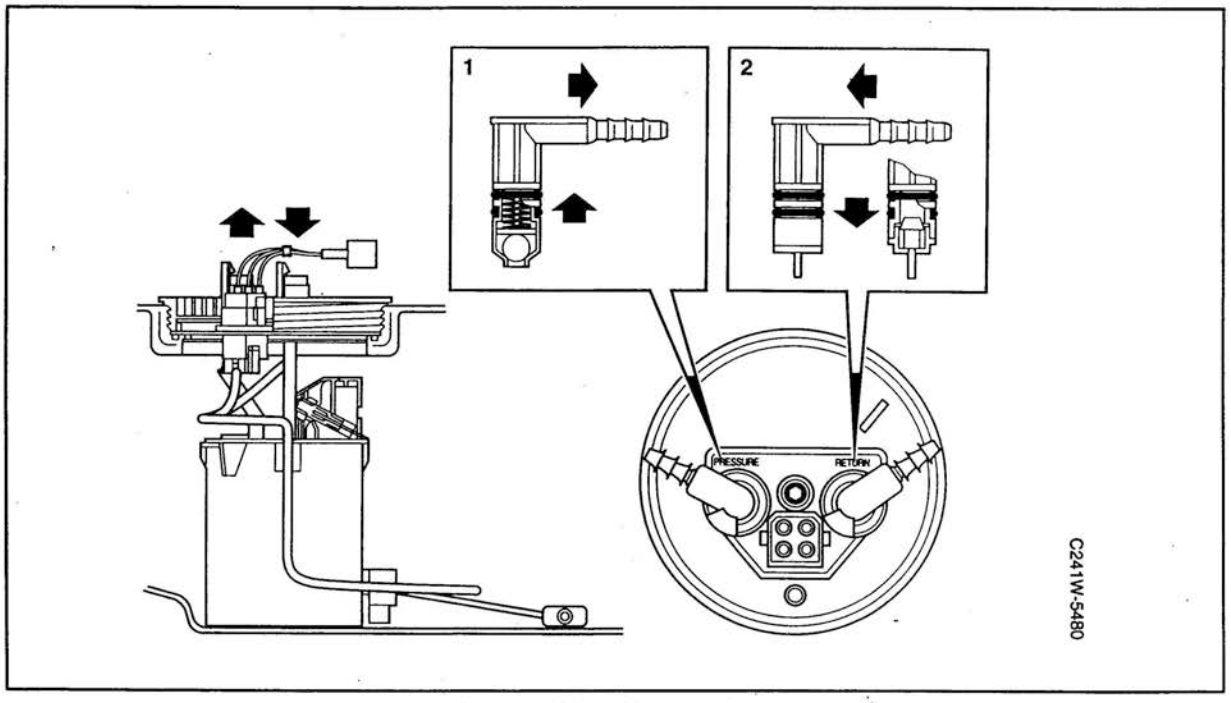

Walbro, positive ejector with integrated fuel level sensor

1. Non–return valve in feed line
2. Roll–over valve in return line

Bosch fuel pump

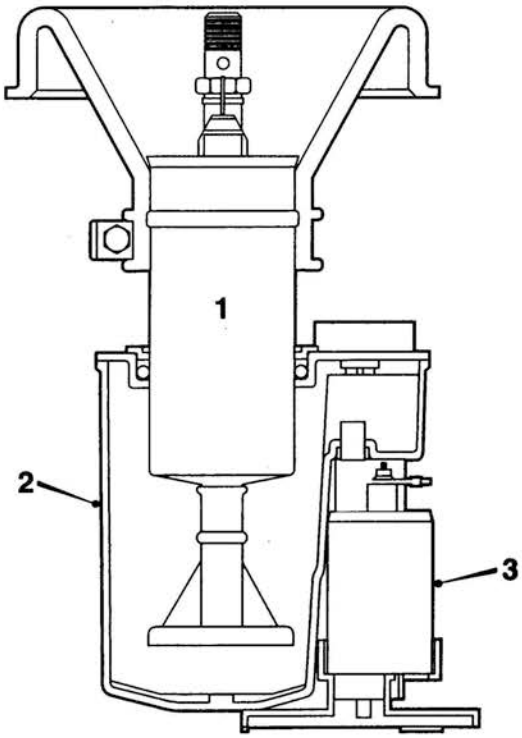

The fuel pump (1), housed inside a container (2) in the fuel tank, is an electric rotary pump. The pump and motor are sealed and cannot be dismantled for overhaul. The fuel pump incorporates a relief valve that opens if the pressure exceeds a certain level. A non–return valve on the pressure side of the pump prevents the pressure in the fuel line from dropping immediately if the ignition is switched off.
An electric feed pump (3) supplies the container with fuel from the tank. The container acts as a pressure vessel and because the main fuel pump is always fed with fuel under pressure, no air bubbles will form.

Walbro fuel pump, negative ejector

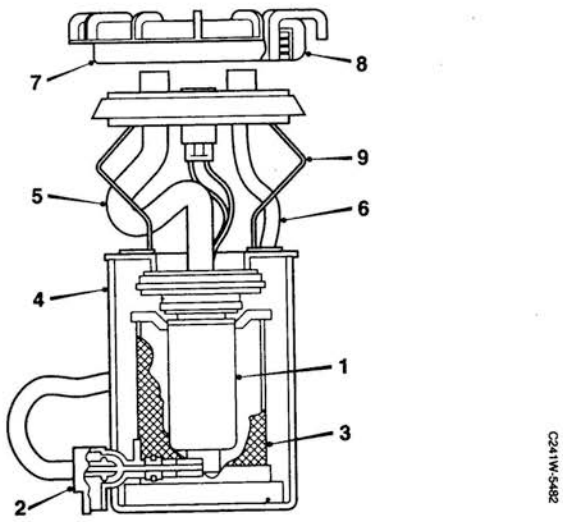

1. Main pump
2. Ejector pump
3. Filter
4. Reservoir
5. Pump delivery line
6. Return line
7. Screw top
8. Seal
9. Spring

The fuel pump is mounted inside a plastic reservoir which is clamped between the top and bottom of the tank. It is located at the bottom by ribs on the bottom of the tank and secured at the top by a screw top.

Movement in the tank is absorbed by the spring in the fuel pump. In the main, the operation and design of the pump is the same as earlier fuel pumps with main and feed pump. However, in the Walbro pump, the feed pump has been replaced with an ejector driven by the flow of return fuel.

The function of the ejector is to supply fuel to the pump. As the main pump is located in the reservoir, fuel supply is assured during cornering and acceleration, even when only a small quantity of fuel remains in the tank.

The pump unit, with the ejector part at the bottom, is seated in a sump in the bottom of the tank. This ensures fuel to the ejector pump, even when there is a small quantity of fuel in the tank and the car is on a steep slope.

If fuel runs out, the following quantity of fuel is required for the pump to once again draw fuel.

1 Car tilting 10% forward and 10% to the right. Fuel quantity 5 liters.

2 Car tilting 10% to the right. Fuel quantity 5 liters.

3 Car on flat ground. Fuel quantity 2.6 liters.

4 When the car is tilting to the left, fuel fills the sump where the pump is located which means that the engine receives fuel until the tank is as good as empty.

Walbro fuel pump, positive ejector

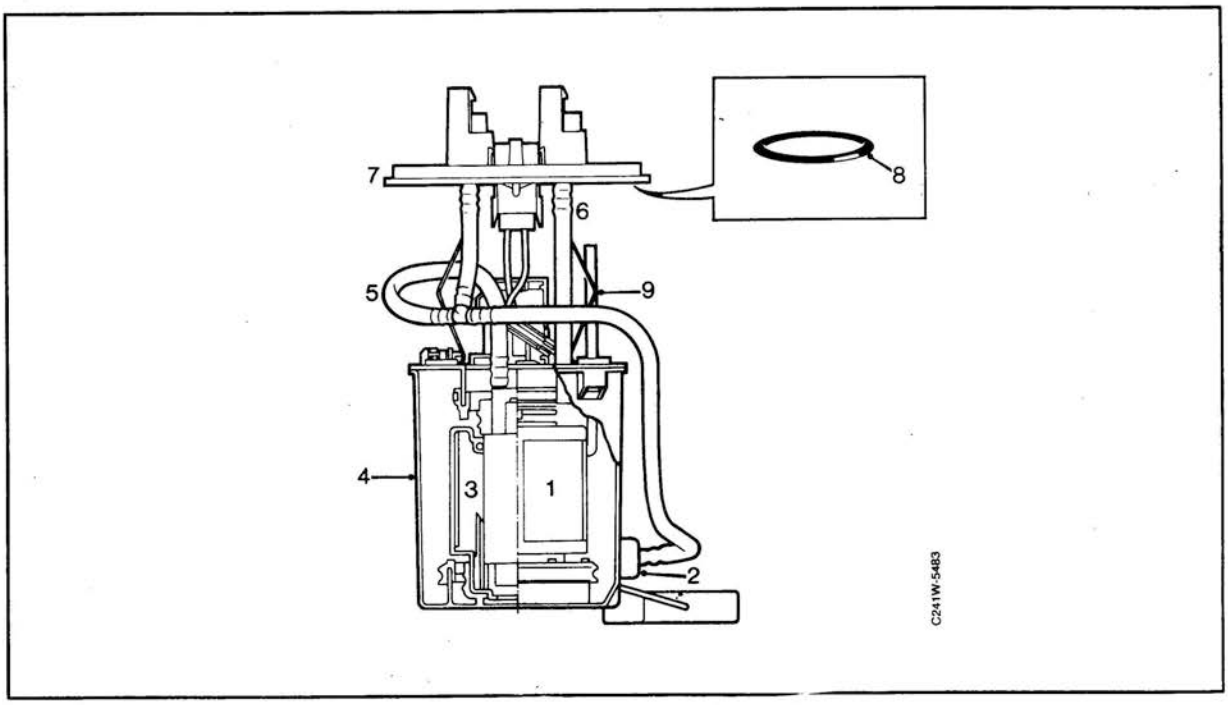

1. Main pump
2. Ejector pump
3. Filter
4. Reservoir
5. Pump delivery line
6. Return line
7. Screw top
8. Seal
9. Spring

The fuel pump is located inside a plastic container which is clamped between the top and bottom of the tank. At the bottom, it is centered with ribs on the bottom of the tank and at the top it is secured with a screw top.

Movement in the tank is absorbed by the spring in the fuel pump. In the main, the operation and design of the pump is the same as earlier fuel pumps with main and feed pump. However, in the Walbro pump, the feed pump has been replaced with a positive ejector driven by flow of fuel from the pressure line via a T joint. The pump is an electric rotor pump.

The function of the ejector is to supply fuel to the pump. As the main pump is located in the reservoir, fuel supply is assured during cornering and acceleration, even when only a small quantity of fuel remains in the tank.Pump and motor are sealed and cannot be dismantled for overhaul.

A non–return valve on the pressure side of the pump, located in the connecting nipple to the pump lid, prevents the pressure in the fuel line from dropping immediately after the engine is switched off. The fuel tank level sensor is mounted on the fuel pump container via a jointed arm.

If fuel runs out, the following quantity of fuel is required for the pump to once again draw fuel.

1 Car tilting 10% forward and 10% to the right. Fuel quantity 5 liters.

2 The car is tilted 10% to the right. Fuel quantity 5 liters.

3 Car on level ground. Fuel quantity 2.6 liters.

4 When the car is tilted to the left, the sump in which the pump is located fills and the engine can be supplied with fuel until the tank is as good as empty.

Fuel filter

The fuel filter is located in the pressure line between the fuel pump and the fuel rail.

Until M1989, the filter was mounted on the battery tray.From M1990, the filter is mounted beside the fuel tank.

The function of the filter is to remove contaminants from the fuel, so that the injectors do not become blocked.

The filter has a paper insert with mean porosity of 5 µm followed by a strainer which catches any detached paper fragments. A support plate holds the filter in the metal housing. The efficiency of the filter depends on how contaminated the fuel is.

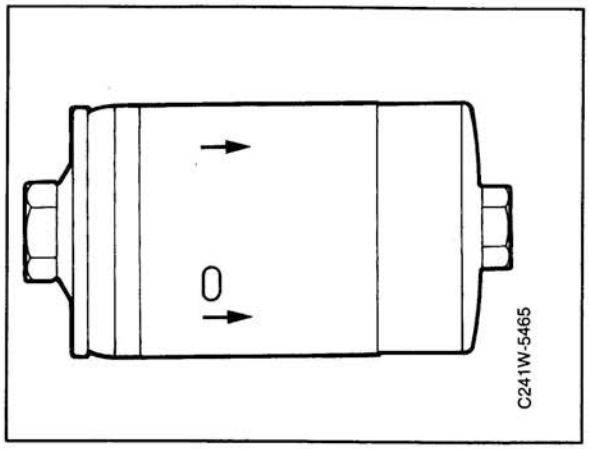

Fuel rail

The fuel rail uniformly distributes fuel to all the injectors. The fuel rail also functions as a fuel accumulator. The volume of the rail is sufficient in comparison to the quantity of fuel used for each work cycle to prevent changes in pressure. The injectors are connected to the fuel rail and are therefore subjected to the same fuel pressure. The construction and design of the fuel rail allow simple connection of the injectors, which are directly connected to the fuel rail.

The fuel line and the pressure regulator are also connected to the fuel rail.

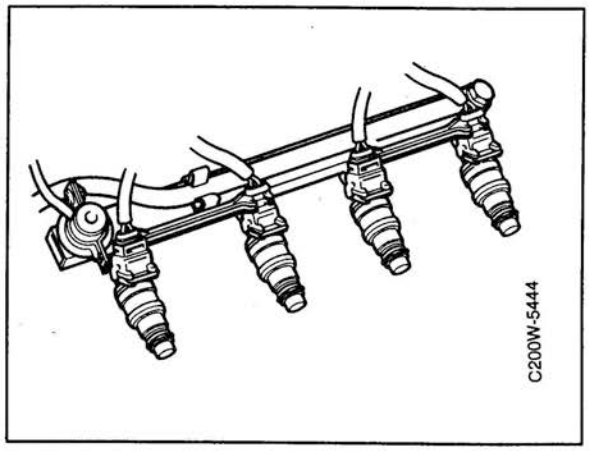

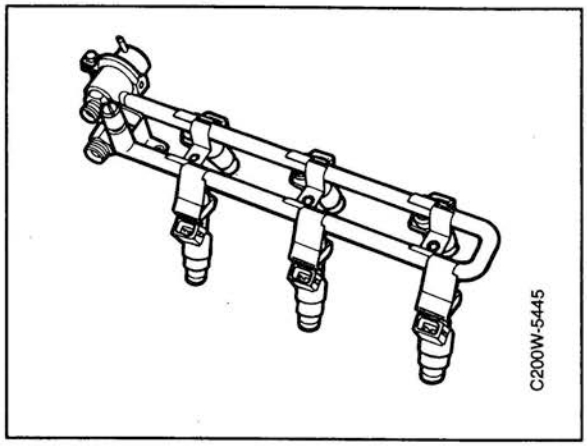

Pressure regulator

There are three versions of the pressure regulator. Two versions are mounted directly on the upper side of the fuel rail and the third version is connected to the fuel rail via a hose.

The regulator maintains a constant ratio between fuel pressure and pressure in the air intake pipe (except V6). This means that the quantity of fuel injected is determined entirely by the opening time of the solenoid injectors.

The pressure regulator is a diaphragm controlled overflow valve. The regulator consists of a metal housing, divided into two chambers by a sprung diaphragm. One of the chambers has a spiral spring which presses on the membrane and fuel passes through the other.

If the preset pressure is exceeded, a valve which is controlled by the diaphragm releases an opening to the return line, through which overflow fuel can run back into the petrol tank.

The pressure regulator spring chamber is connected to the engine's air intake pipe behind the air throttle via a hose (previously on V6). This means that the pressure in the fuel system is affected by the absolute pressure in the intake pipe, which means that the pressure drop across the injectors is constant whatever the position of the throttle.

See "Technical data" for actual pressure readings.

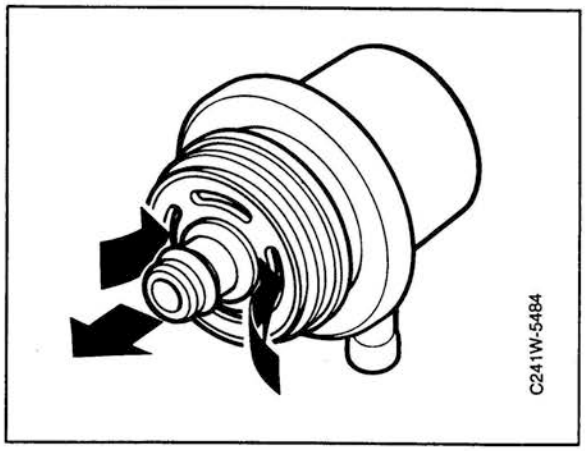

Pulsator

The pulsator is mounted between the fuel line and fuel rail. The function of the pulsator is to damp the pulsating sound generated by the injectors and to prevent this sound being propagated in the system.

A diaphragm in the chamber is pressed by fuel pressure against a sealed cushion of air. If there are pulsations in the pressure, these are damped out by the air cushion and noise level is decreased.

A new pulsator was introduced into production during M1992. The new pulsator has a spring loaded diaphragm that is better able to cope with damping and variations in the quality of fuel. There is also a version for use when servicing with a screw connection. The pulsator used in production has a ribbed connector.

No pulsator is required on cars equipped with Trionic and Motronic.

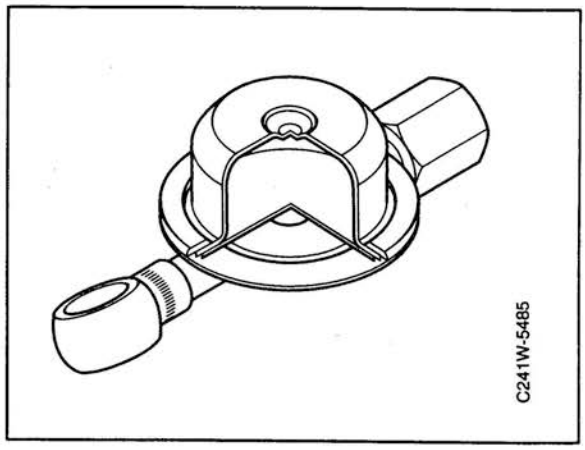

Injectors

The injectors are directly connected to the fuel rail. These are located in intake ports in front of the intake valves.

The injectors consist of body and nozzle with solenoid filler. Inside the valve body are solenoid coil and nozzle guide. The injectors are electromagnetically controlled and are opened and closed with electrical control pulses from the control module.

There are different designs of injector depending on engine version.

For further information on injectors, see appropriate service manual for engine management system.

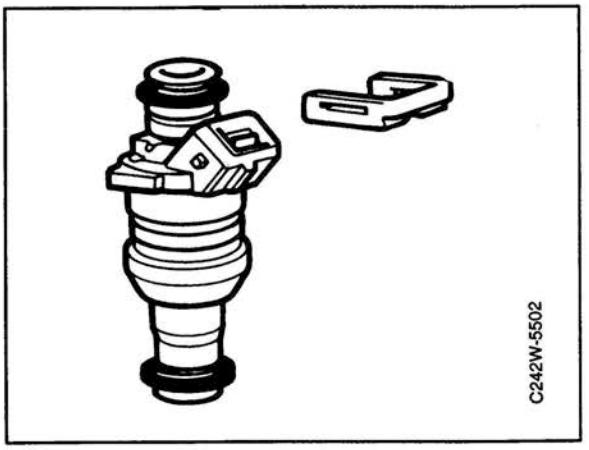

Intake air temperature (IAT) sensor (V6 engines)

The IAT sensor is mounted between the air cleaner and the engine's air intake pipe. The temperature sensor continuously supplies the control module with information about the temperature of the intake air.

The IAT sensor consists of a brass body with an NTC type resistor at its core. NTC (Negative Temperature Coefficient) means that the resistance is low at high temperatures and high at low temperatures.

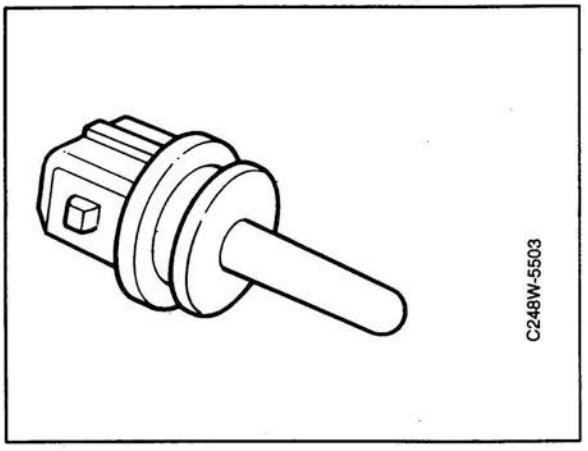

Mass air flow (MAF) sensor, 4 Cyl

The MAF sensor is mounted between the air filter and the air intake.

The MAF sensor consists of a plastic housing (aluminium until M1988) with a feeder duct. In the feeder duct is a centered inner tube with a platinum filament (hot–wire). A wire mesh protects the filament on the intake and outlet sides.

Control of the current required to maintain the filament at a constant temperature is with the help of a bridge circuit and a detector resistor, the voltage variation across which is directly proportional to the mass air flow.

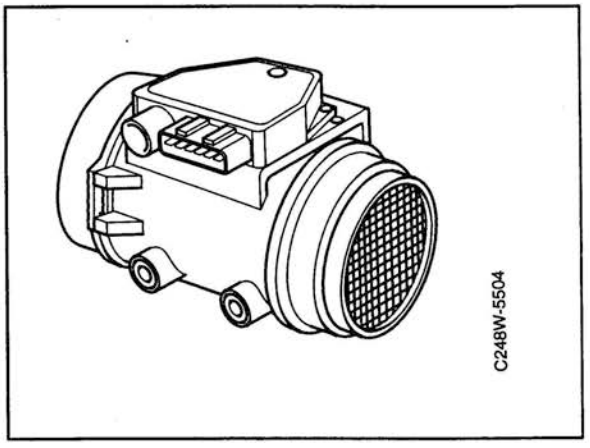

Mass air flow sensor (MAF), V6

The MAF sensor is mounted between the air filter and the air intake.

The mass air flow sensor contains a ceramic plate which is in the air flow and which is electrically heated to 180° C (356° F). When air flow increases, higher voltage is required across the heating element to maintain the temperature at 180° C (356° F).

The voltage is used by the control module as a measure of mass air flow and is the principal measure for fuel injection.

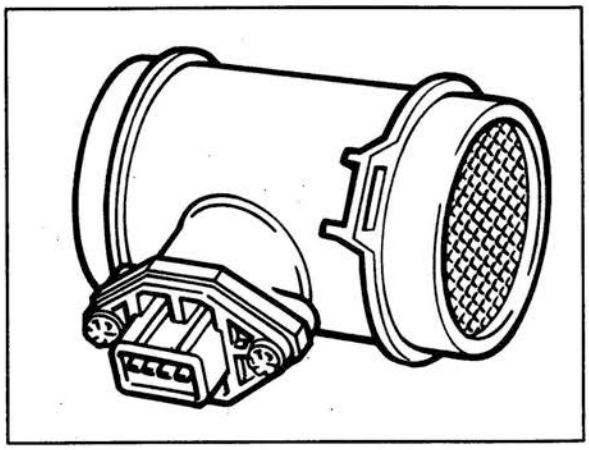

Air cleaner

The air cleaner and filter are located in the left–hand wheel housing. Intake air is drawn in via a snorkel between the air cleaner and an outlet in the left–hand wheel housing plate.

The air cleaner consists of a container in which an air cleaning filter is fitted. A cover is attached to the container with six clips. The cover has a connecting elbow for the mass air flow sensor which is attached with two clips.

The air cleaner consists of an outer and inner air cleaner housing as well as a filter cartridge and air pipe.

Until M1987 (turbo) and until M1988 (non–turbo), the air cleaner was mounted in the engine compartment on the left–hand side.

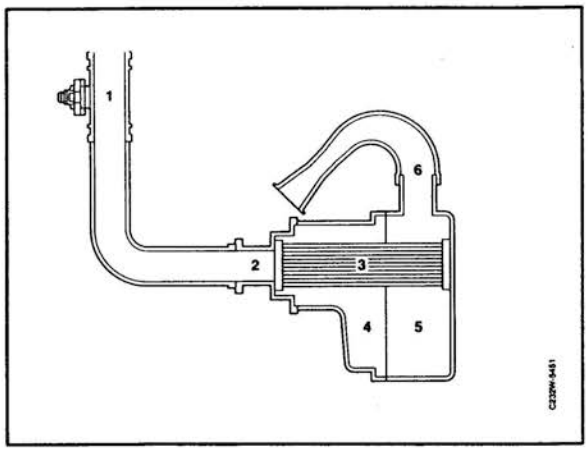

Air induction system

Air induction system 4 Cyl turbo engine until M1987 4 Cyl i/S until M1988

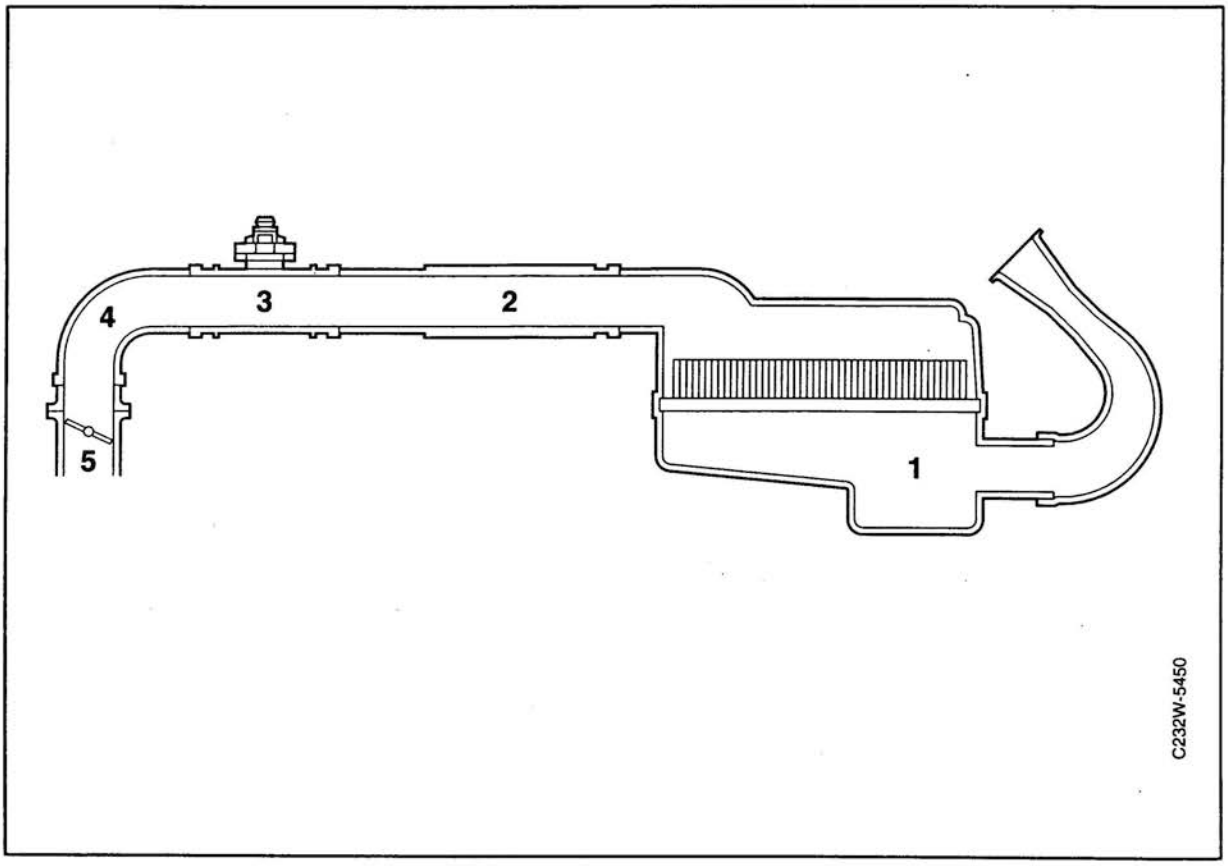

1. Air cleaner
2. Connecting pipe
3. Mass air flow sensor
4. Rubber gaiter
5. Throttle body

Changing air cleaner filter

Removal

1 Remove connecting pipe

2 Detach air hose (pulse air) from air cleaner.

3 Undo the clips securing the upper part of the air cleaner.

4 Remove the air cleaner lid and remove the filter.

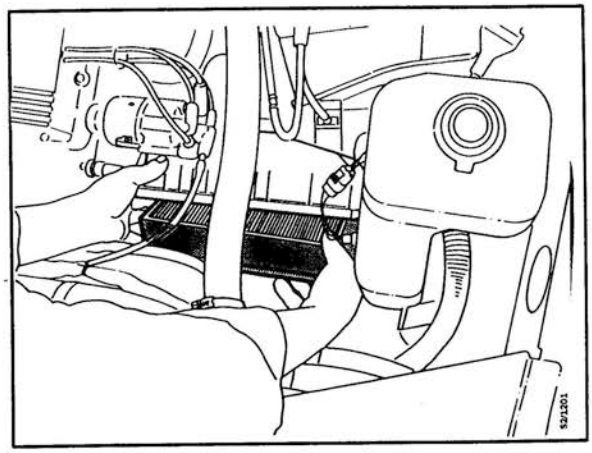

5 Clean the air collection box (lower part of air cleaner). Fit new filter. Place the lower side of the filter (with sealing edge) in the air collection box.

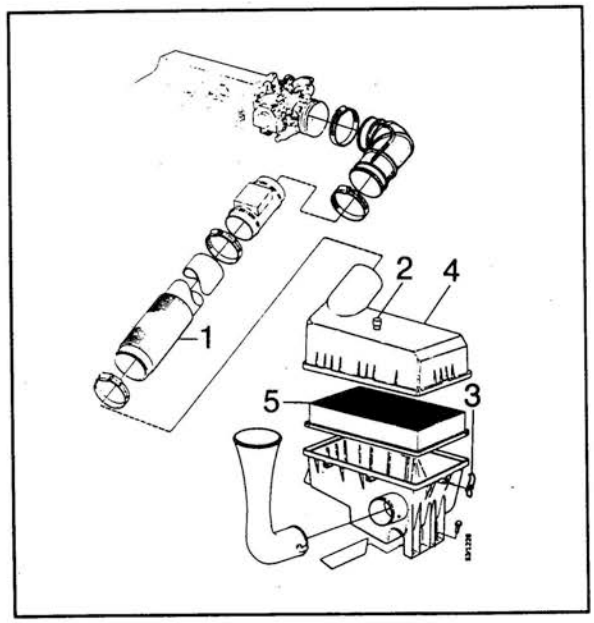

Fitting

Fitting is in reverse order.

Changing the mass air flow sensor

Removal

1 Disconnect electrical connection.

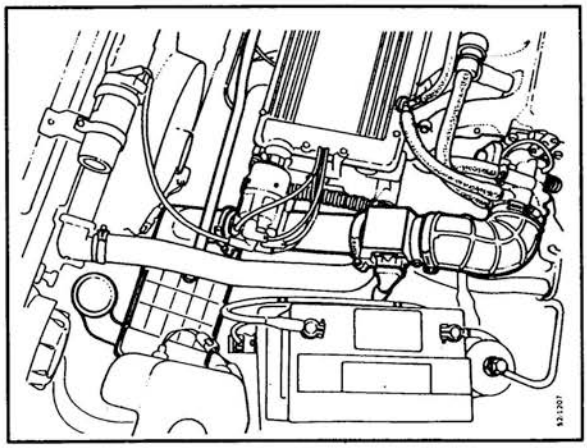

2 Remove connecting pipe

3 Remove mass air flow sensor from rubber gaiter.

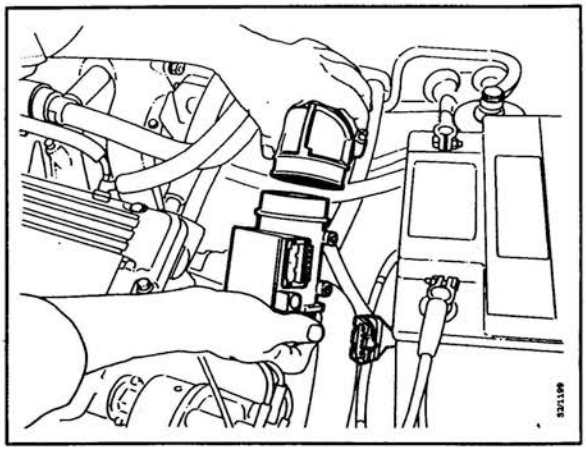

Fitting

Fitting is in reverse order.

Air induction system 4 Cyl turbo engine M1988–

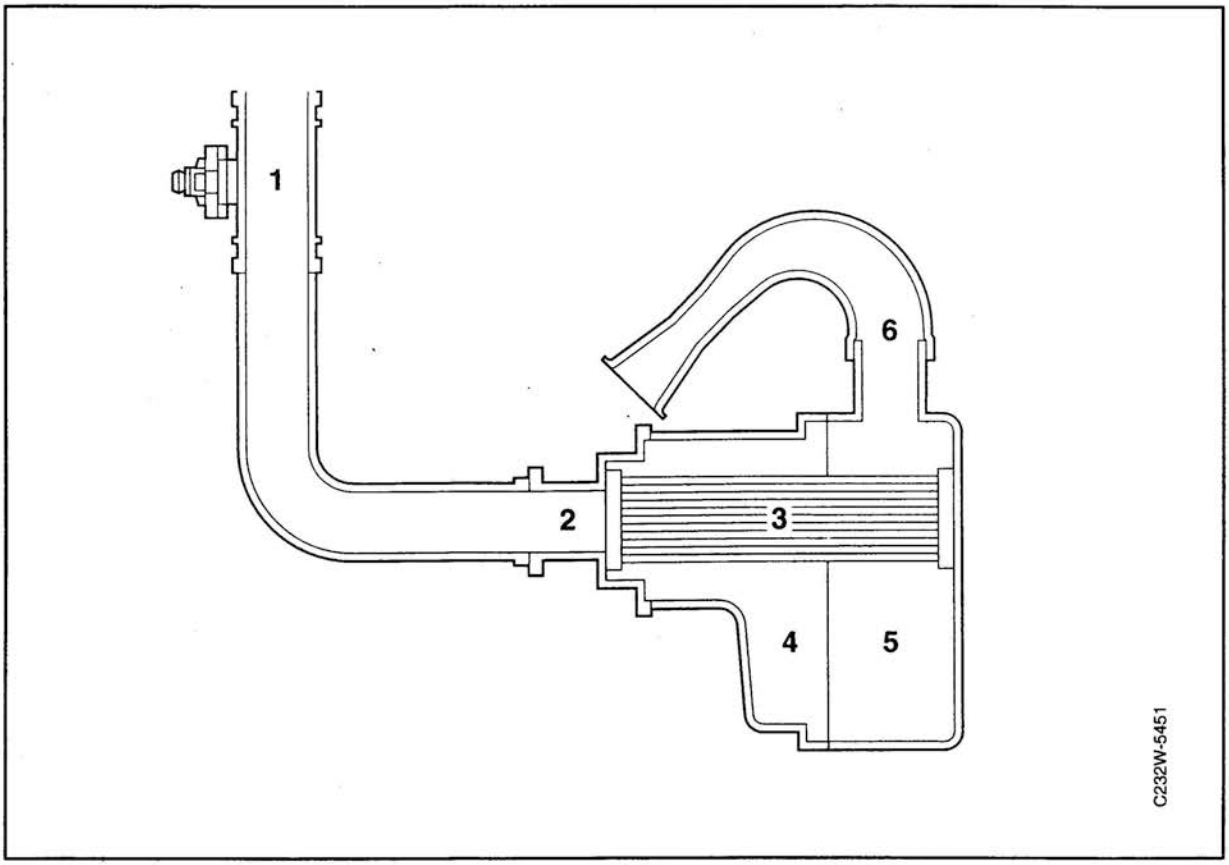

1. Mass air flow sensor
2. Filter cover
3. Filter cartridge
4. Inner air cleaner housing
5. Outer air cleaner housing
6. Air pipe

Changing filter element

1 Undo the three clips on the air filter container and the two on the MAF sensor housing and remove the intermediate section.

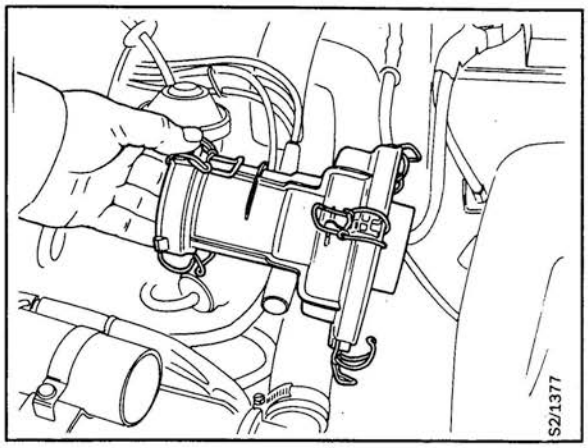

2 Raise the mass air flow sensor and the connection to the turbo unit whilst pulling the filter element straight out.

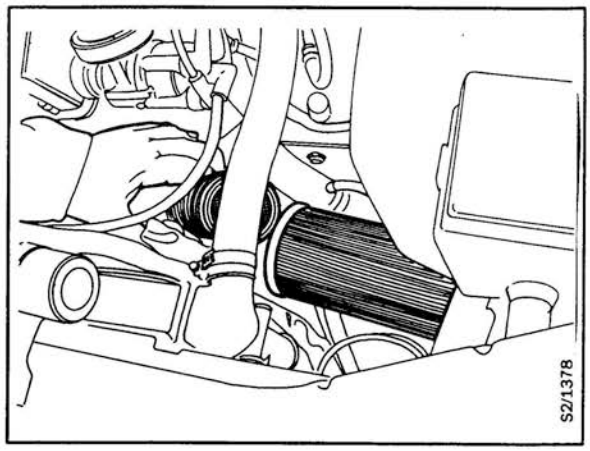

3 Reach in and wipe the filter housing with a dry cloth.

4 Place a new filter in the filter housing. Note that the air intake opening should face outwards towards the intermediate piece.

5 Fit the intermediate piece complete with O–ring (towards mass air flow sensor).

Changing the air filter housing

Removal

1 Remove the air filter.

2 Remove the front part of the middle infill panel.

3 Undo the air filter housing clips and remove the container.

Fitting

Fitting is in reverse order.

Air induction system 4 Cyl i/S M1989–

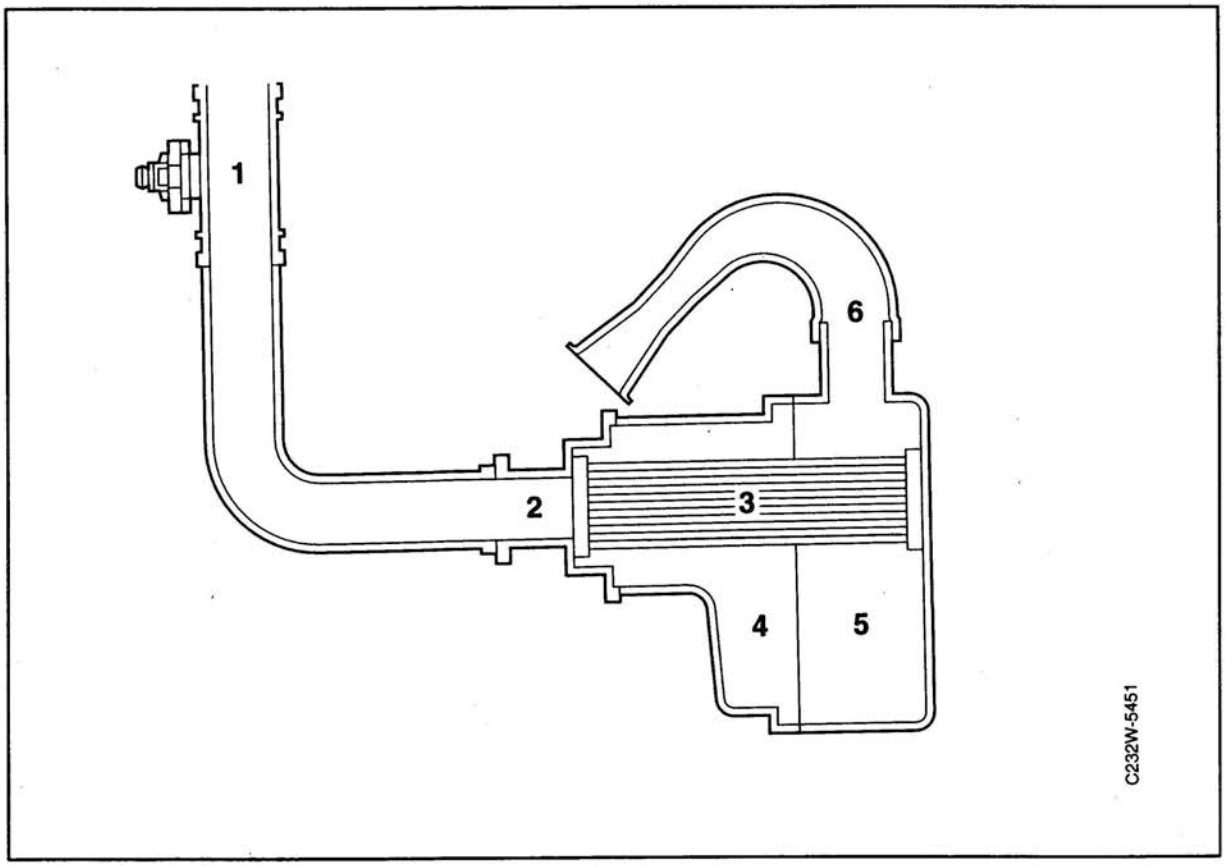

1. Mass air flow sensor
2. Plastic pipe (connecting pipe)
3. Filter cartridge
4. Inner air cleaner housing
5. Outer air cleaner housing
6. Air pipe

Changing filter cartridge, air cleaner

1 Undo the clips on the air cleaner lid and fold down the lid and plastic pipe so that the filter cartridge can be removed from the air cleaner housing.

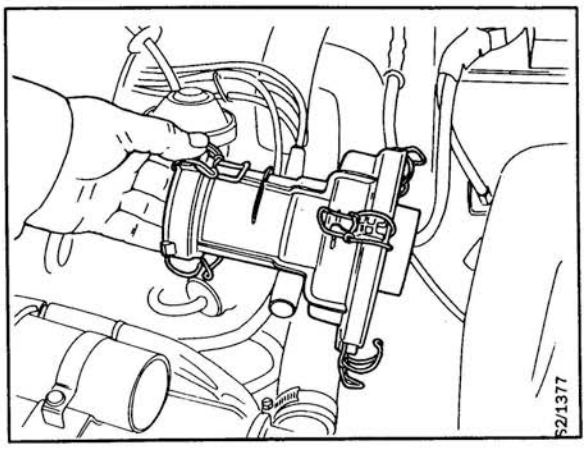

2 Remove the filter cartridge.

3 Wipe the inner air cleaner housing with a dry cloth.

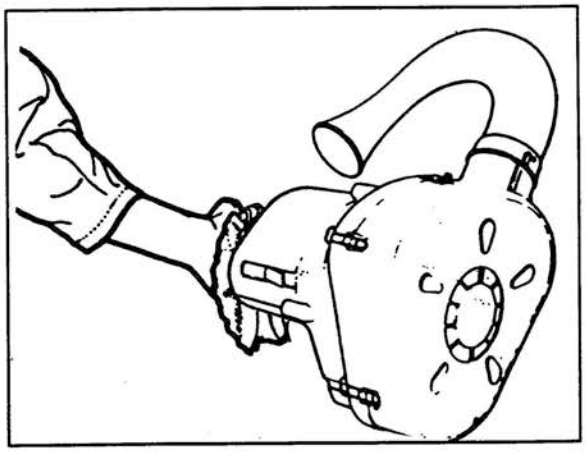

Important

When fitting the new filter cartridge, it the open end should point upward toward the lid.

4 Place a new air filter cartridge in the air cleaner housing.
New filter cartridges are always fitted with the open end upward towards the filter lid.

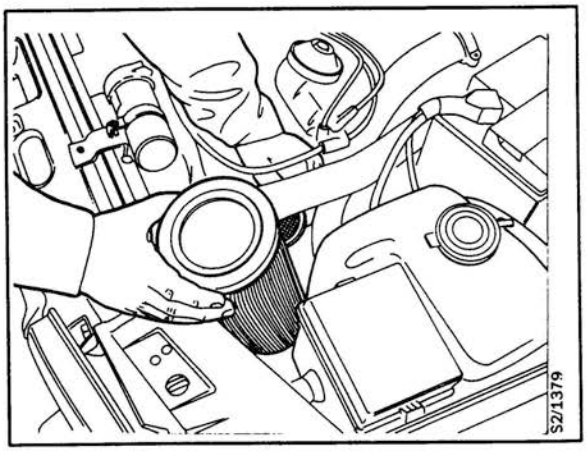

5 Connect the air cleaner lid and attach the three clips.

Air cleaner housing

Removal

1 Remove the filter cartridge, see last page.

2 Remove the two retaining screws for the washer fluid reservoir and raise it so that the inner air cleaner housing is freed.

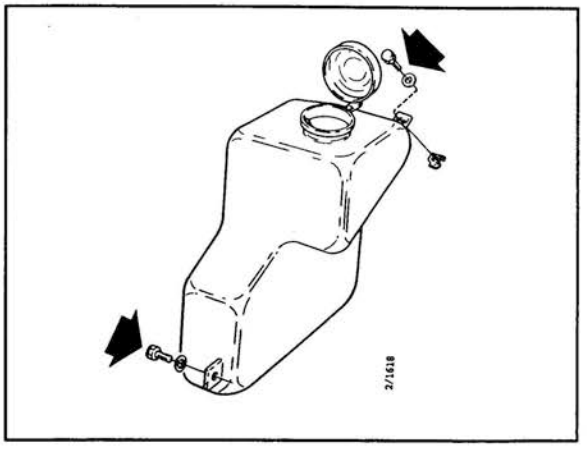

Important

When removing the light cluster as detailed below, take care not to scratch the bumper. Never place the cluster directly on the bumper but always place a cloth or similar protection on the bumper.

3 Undo and move aside the left–hand light cluster.

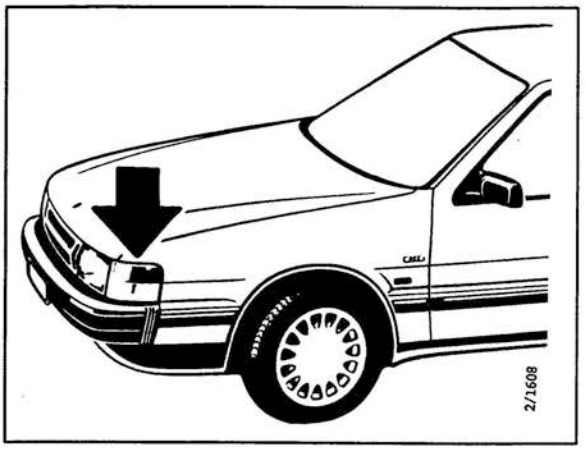

4 Remove the left–hand front wheel.

5 Remove the front part of the middle infill panel.

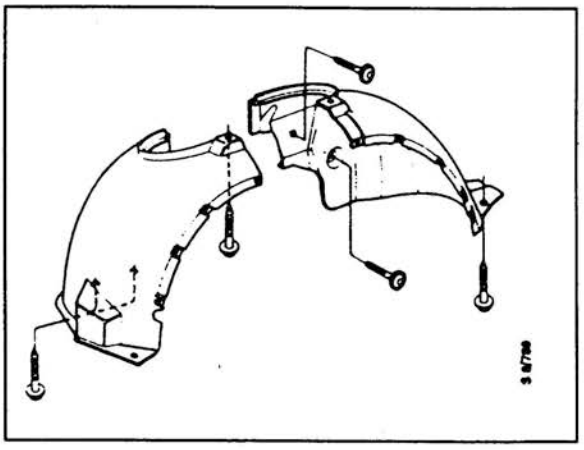

6 Remove the spoiler cover under the filter housing.

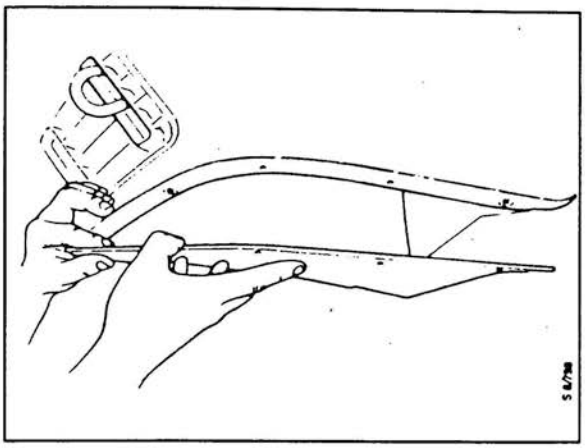

7 Undo the five clips that hold together the outer and inner air cleaner housing and then lift out the outer part of the air pipe. Two of the clips can be undone through the light cluster opening.

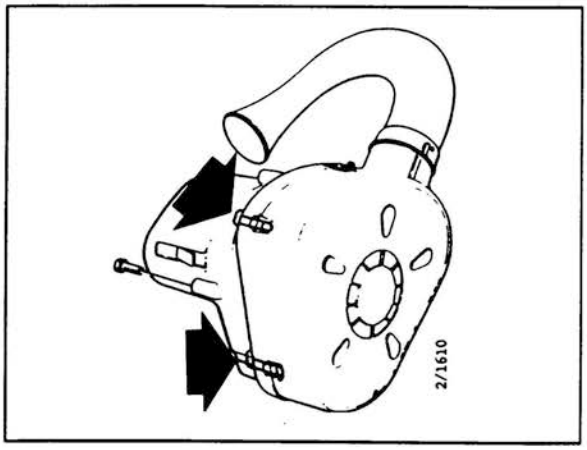

8 Remove the three inner air cleaner housing retaining screws.

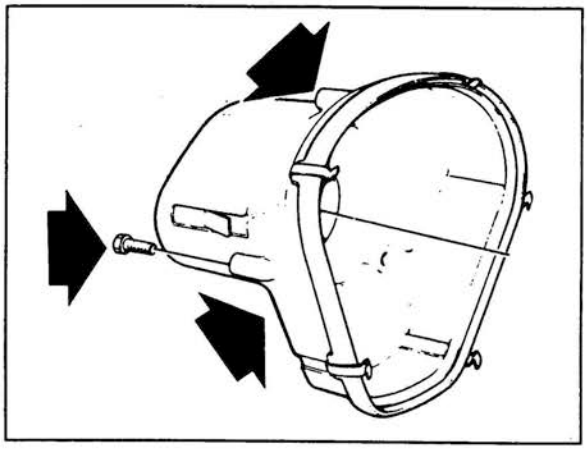

9 Press down the locking lugs one by one whilst carefully coaxing the wheel housing plate from its hole.

Fitting

Fitting is in reverse order.

Air induction system V6 M1995–

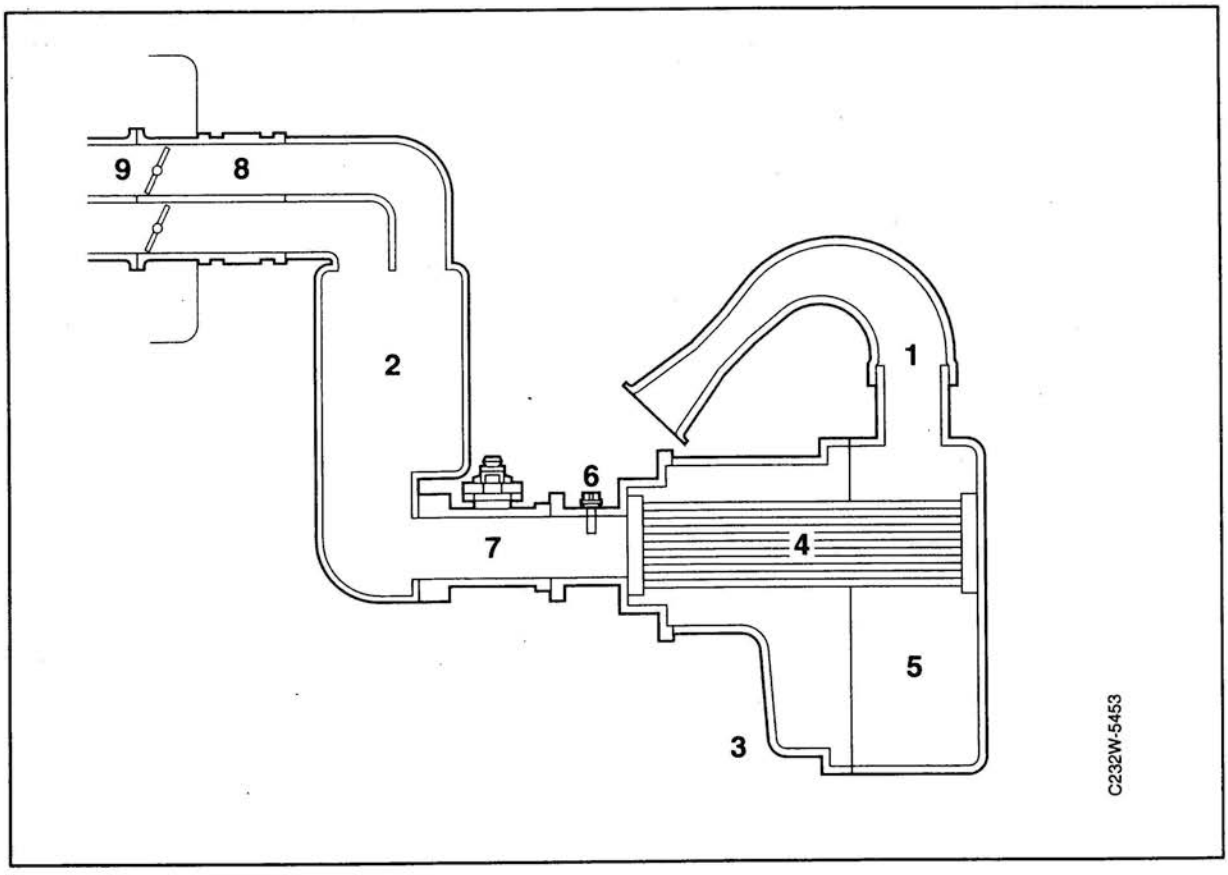

1. Air intake pipe
2. Resonator
3. Air cleaner consisting of:
4. Filter element
5. Air collection chamber
6. Intake air temperature sensor
7. Mass air flow sensor
8. Connecting hose
9. Throttle butterfly

Air filter and air collection box V6

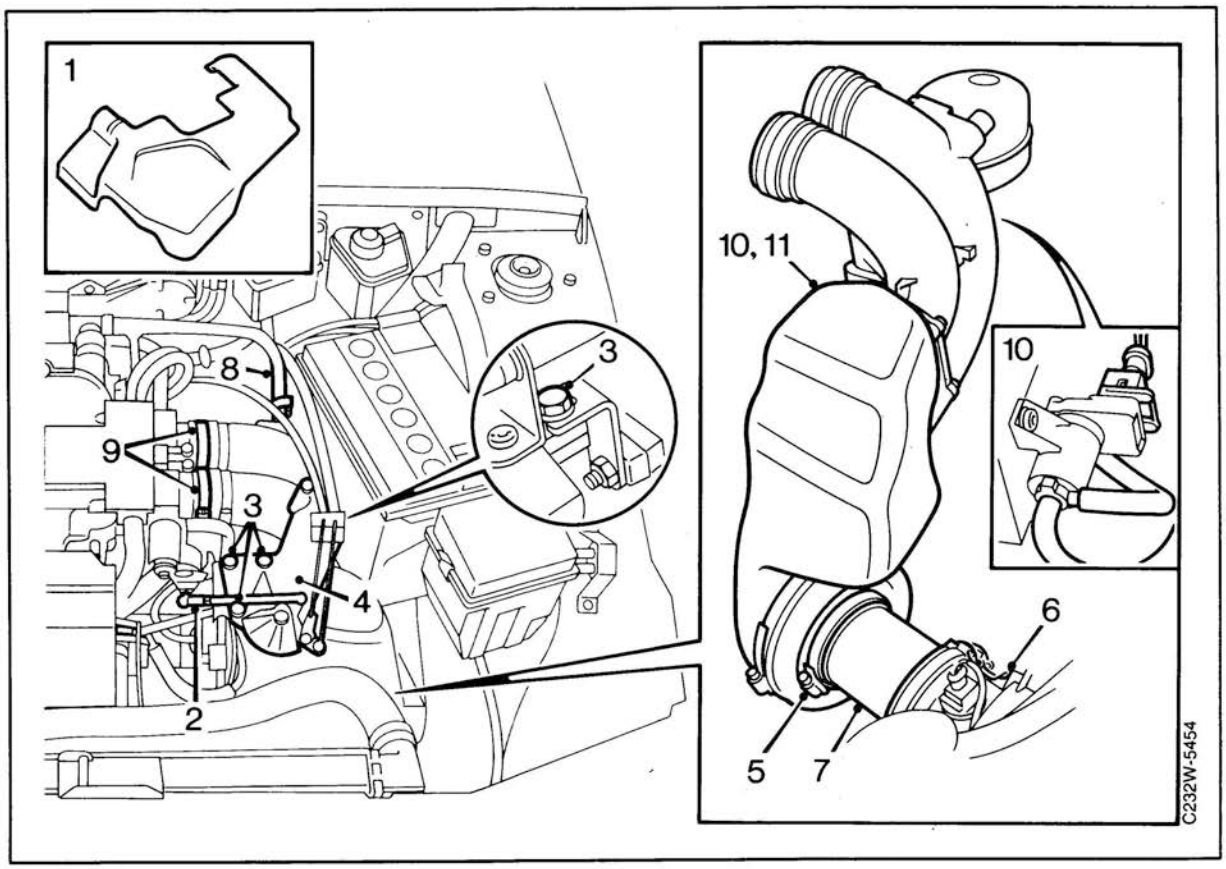

Removal

1 Remove the left–hand engine cover.

2 Release the control arm from the throttle shaft.

3 Undo the bracket attachments.

4 Remove the control plate bracket.

5 Undo the hose clip securing the MAF sensor to the resonator.

6 Undo the two clips between the MAF sensor and the air cleaner.

7 Undo the sensor connectors and remove the MAF sensor.

8 Remove the hose to the idle air control valve on the intake pipe.

9 Undo the hose clips between the air intake pipe and the throttle body.

10 Lift the air intake pipe together with the resonator. Detach the two vacuum hoses from the vacuum tank as well as the control valve for the outer butterfly and the electrical connection for the IAC valve.

11 Remove the air intake pipe and the resonator.

Air filter and air collection box V6, (contd.)

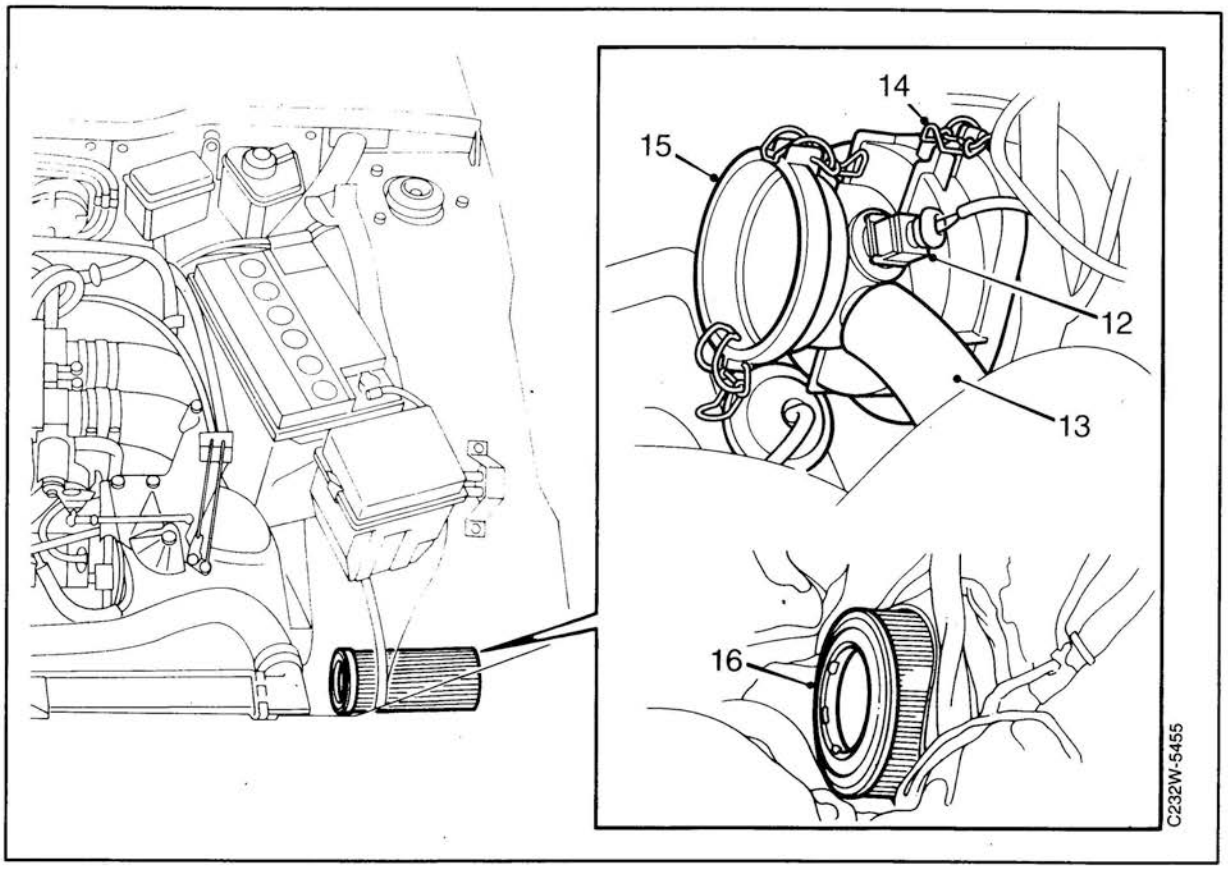

12 Unplug the electrical connection to the IAT sensor.

13 Undo the hose located between the air pump and intermediate piece from the intermediate piece.

14 Undo the clips holding the intermediate piece to the air cleaner.

15 Remove the intermediate piece.

16 Remove the filter.

Fitting

Fitting is in reverse order.

Important

Adjust the kick–down cable, see service manual 2:7 Engine Management System.

Changing the mass air flow sensor

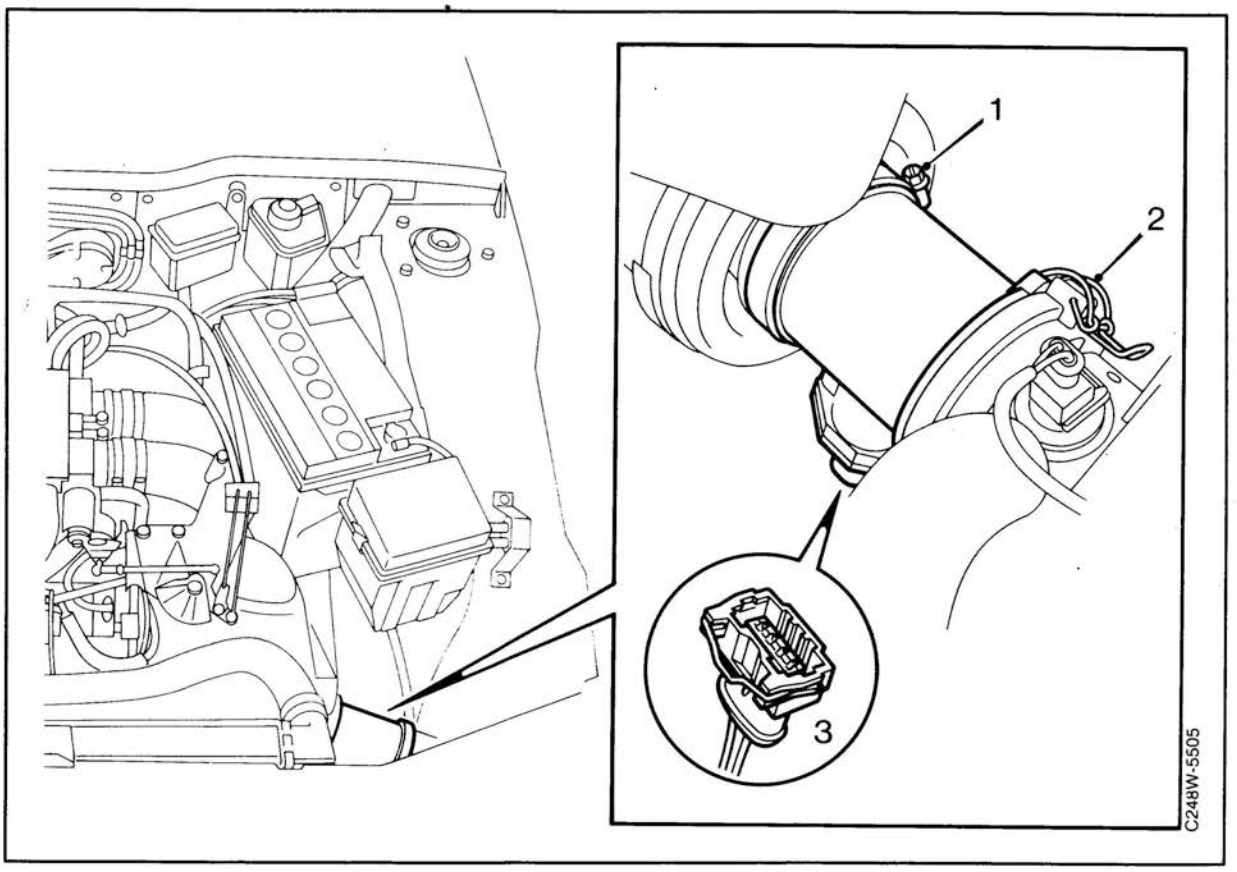

Removal

1 Undo the hose clip securing the MAF sensor to the resonator.

2 Undo the two clips between the MAF sensor and the air cleaner.

3 Unplug the sensor connector and remove the MAF sensor.

Fitting

Lubricate the O–ring with a little vaseline to make it easier to fit.

Fitting is in reverse order.

Removing the air intake pipe and resonator V6

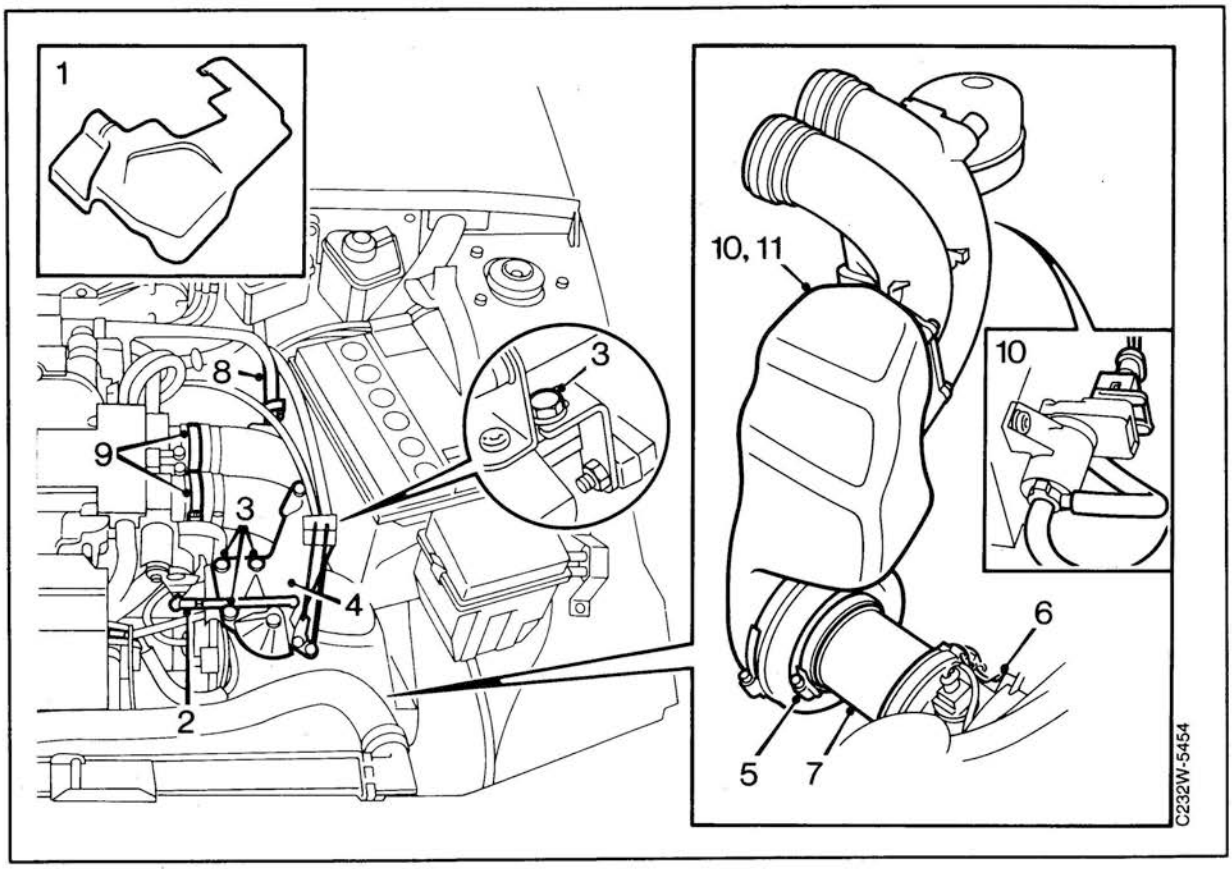

Removal

1 Remove the left–hand engine cover.

2 Release the control arm from the throttle shaft.

3 Undo the bracket attachments.

4 Remove the control plate bracket.

5 Undo the hose clip securing the MAF sensor to the resonator.

6 Undo the two clips between the MAF sensor and the air cleaner.

7 Unplug the sensor connector and remove the MAF sensor.

8 Remove the hose to the idle air control valve on the intake pipe.

9 Undo the hose clips between the air intake pipe and the throttle body.

10 Lift the air intake pipe together with the resonator. Detach the two vacuum hoses from the vacuum tank as well as the control valve for the outer butterfly and the electrical connection for the IAC valve.

11 Remove the air intake pipe and the resonator.

Fitting

Fitting is in reverse order.

Important

Adjust the kick–down cable, see service manual 2:7 Engine Management System.

Fuel system

Important

For method for changing fuel rail and checking/ changing the fuel pressure regulator M1985–1993, see service manual 2:3 LH Fuel–injection system.

Emptying the fuel tank

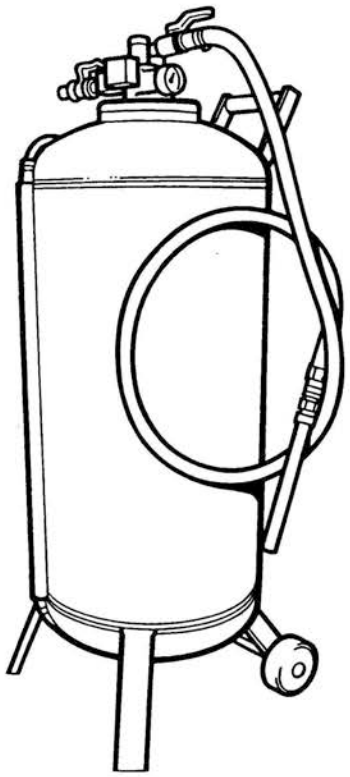

⚠ WARNING

Ensure good ventilation. If approved ventilation for removal of fuel fumes is available, this should be used.

Wear protective gloves. Long–term contact with fuel can cause skin irritation.

Keep a class BE fire extinguisher nearby. Be careful of the danger of sparking, e.g.from circuit breaking, short circuiting etc.

No smoking.

The fuel tank has no bottom plug. When carrying out work on the fuel system which requires the fuel tank to be emptied, this is done with a separate draining unit via the filling pipe or using the car's fuel pump.

Emptying the tank with the car's fuel pump:

1 Remove the floor from the luggage compartment and the cover over the fuel pump electrical connections.

2 Remove the pressure line from the fuel pump and connect a plastic hose with a suitable connector to the fuel pump pressure output.

3 Run the plastic hose to a container.

4 Open the glove compartment flap and remove the cover from the fuse board. Connect LH diagnostics cable 83 93 886 between +30 and the positive side of the fuse to the fuel pump so that there is voltage to the pump.

5 Start the pump by switching the switch to "ON".

6 Remove the plastic hose when the tank is empty.

Fuel tank up to M1991

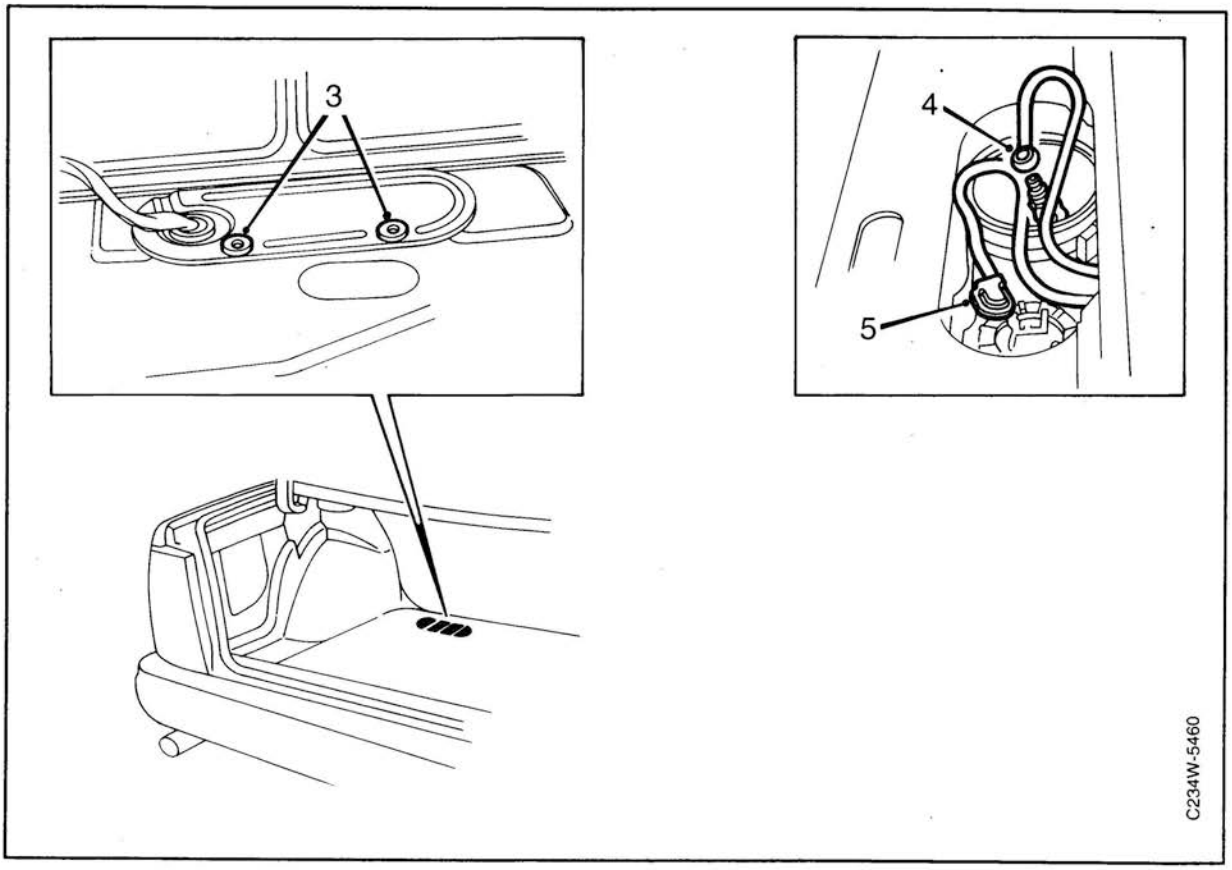

⚠ WARNING

Ensure good ventilation. If approved ventilation for removal of fuel fumes is available, this should be used.

Wear protective gloves. Long–term contact with fuel can cause skin irritation.

Keep a class BE fire extinguisher nearby. Be careful of the danger of sparking, e.g.from circuit breaking, short circuiting etc.

No smoking.

Removal

1 Empty the fuel from the tank.

2 Remove the two retaining screws from the floor of the luggage compartment and remove the floor.

3 Turn both the bayonet fasteners that secure the cover over the fuel pump using a hexagon key and remove the cover.

4 Unscrew the banjo connector from the fuel line and pull off the electrical connectors to the pump, feed pump and fuel level sensor.

5 Remove the return fuel line connection. Empty the tank before removing. A small quantity of fuel is acceptable.

6 Place the car on a lift. Make sure that the rear RH lift arm plate is placed as far out on the jack attachment as possible so as not to interfere with removal.
Raise the car and remove the RH rear wheel.

Fuel tank up to M1991 (contd.)

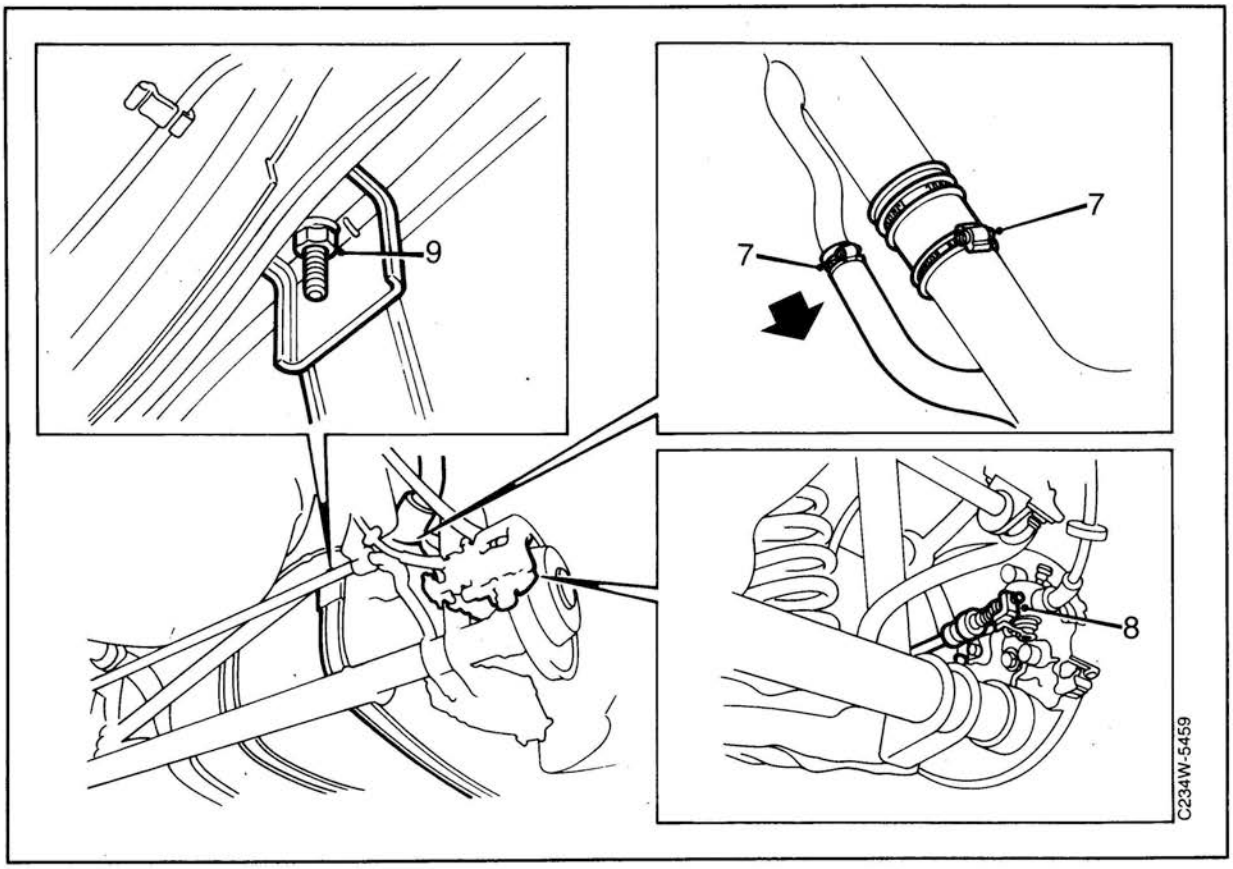

7 Remove both the rubber elbow from the pipe attached to the tank and the breather hose from the filler pipe.

Cover the opening of the filler pipe to prevent fuel from running out and contaminants getting into the tank.

From M1986 (chassis No.YS3CG1003175) detach the breather hose from the upper connector hose.

8 Remove the handbrake cable to the control arm as well as the rubber attachment for the cable from the spring.

9 Undo the nuts on the tank strap. Start with the strap on the RH side and bend the handbrake cable to one side. Lift down the strap on the LH side. Support the tank while working.

10 Lift down the tank LH side first. Make sure that the tank's pipe is not damaged against the plate edge of the bodywork.

Fitting

Tightening torque for hose clips:
2 Nm (16 lbf ft).

Important

Danger of cracking if they are over–tightened.

Fit the anti–splash device (butterfly valve) so that the butterfly spindle is vertical.

Important

Make sure that the fuel lines are fed through the aperture for the combined tank unit.
The strap fastener must not turn as the bolt is tightened as it is likely to shear at the weld.
After fitting and tightening, the strap must be straight.

Otherwise fit in reverse order.

Fuel tank from M1992–

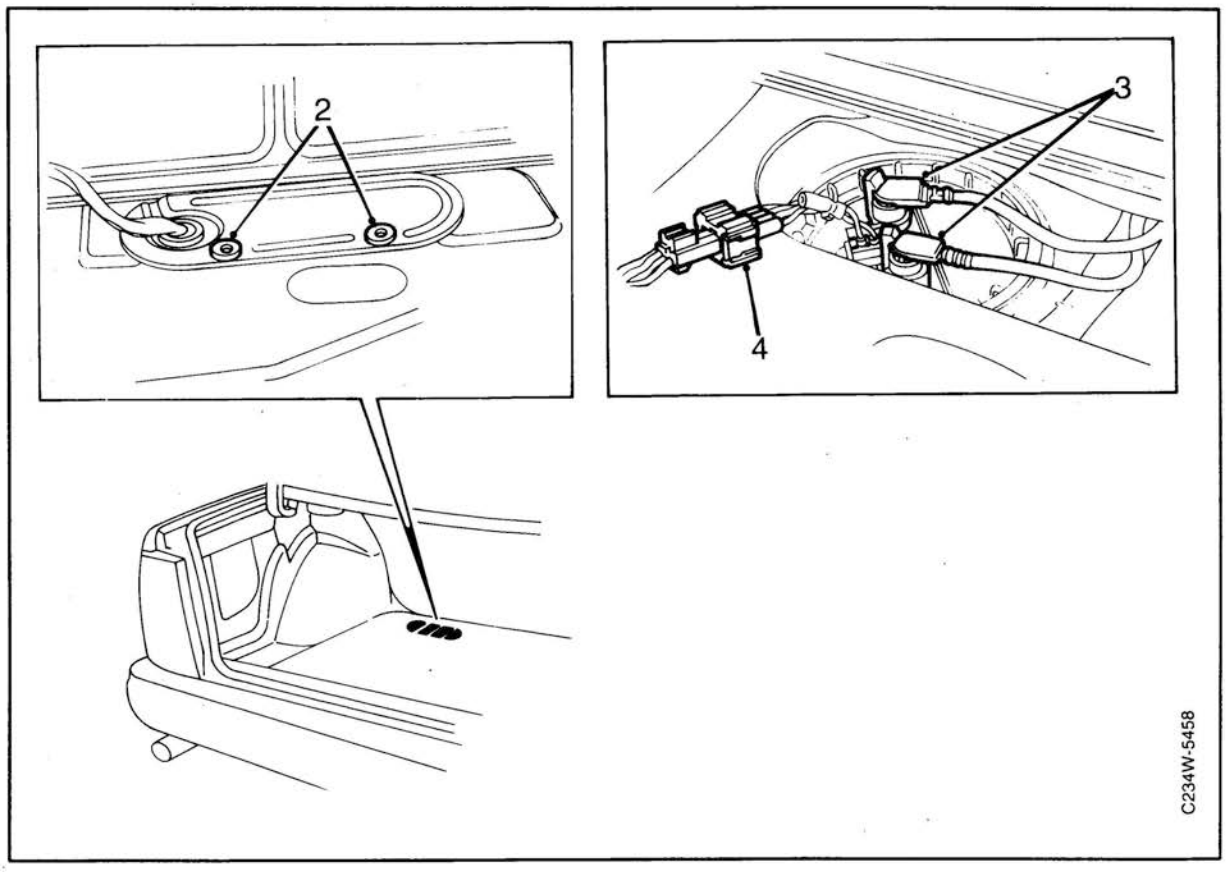

⚠ WARNING

Ensure good ventilation. If approved ventilation for removal of fuel fumes is available, this should be used.

Wear protective gloves. Long–term contact with fuel can cause skin irritation.

Keep a class BE fire extinguisher nearby. Be careful of the danger of sparking, e.g.from circuit breaking, short circuiting etc.

No smoking.

Removal

1 Empty the fuel from the tank.

2 Remove the two retaining screws from the floor of the luggage compartment and remove the floor.

3 Turn both the bayonet fasteners that secure the cover over the fuel pump using a hexagon key and remove the cover.

4 Detach the fuel line and the electrical connections to the fuel pump.

Fuel tank from M1992– (contd.)

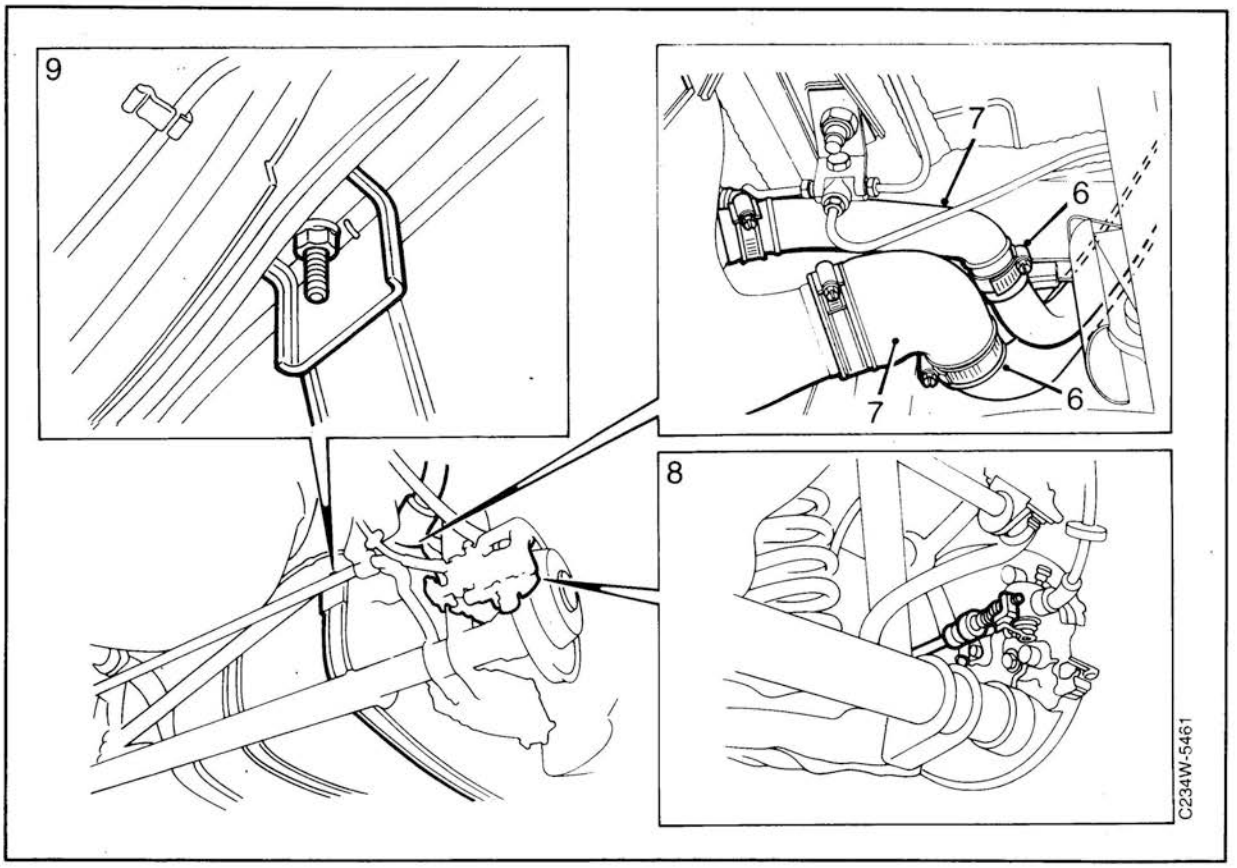

5 Clean around the filler pipe and its connections.

6 Remove the hose clips on the breather hose and at the lower rubber elbow.

7 Tuck the rubber elbow and breather hose to one side.

8 Remove the handbrake cable from the lever as well as the rubber fastener for the cable from the spring.

9 Undo the nuts on the tank strap. Start with the strap on the RH side and bend the handbrake cable to one side. Lift down the strap on the LH side. Support the tank while working.

10 Lift down the tank LH side first. Make sure that the tank's pipe is not damaged against the plate edge of the bodywork.

Fitting

Tightening torque for hose clips:
2 Nm (16 lbf ft).

Important

Danger of cracking if they are over–tightened.

Fit the anti–splash device (butterfly valve) so that the butterfly spindle is vertical.

Important

The strap fastener must not turn as the bolt is tightened as it is likely to shear at the weld.
After fitting and tightening, the strap must be straight.

Otherwise fit in reverse order.

Fuel filter

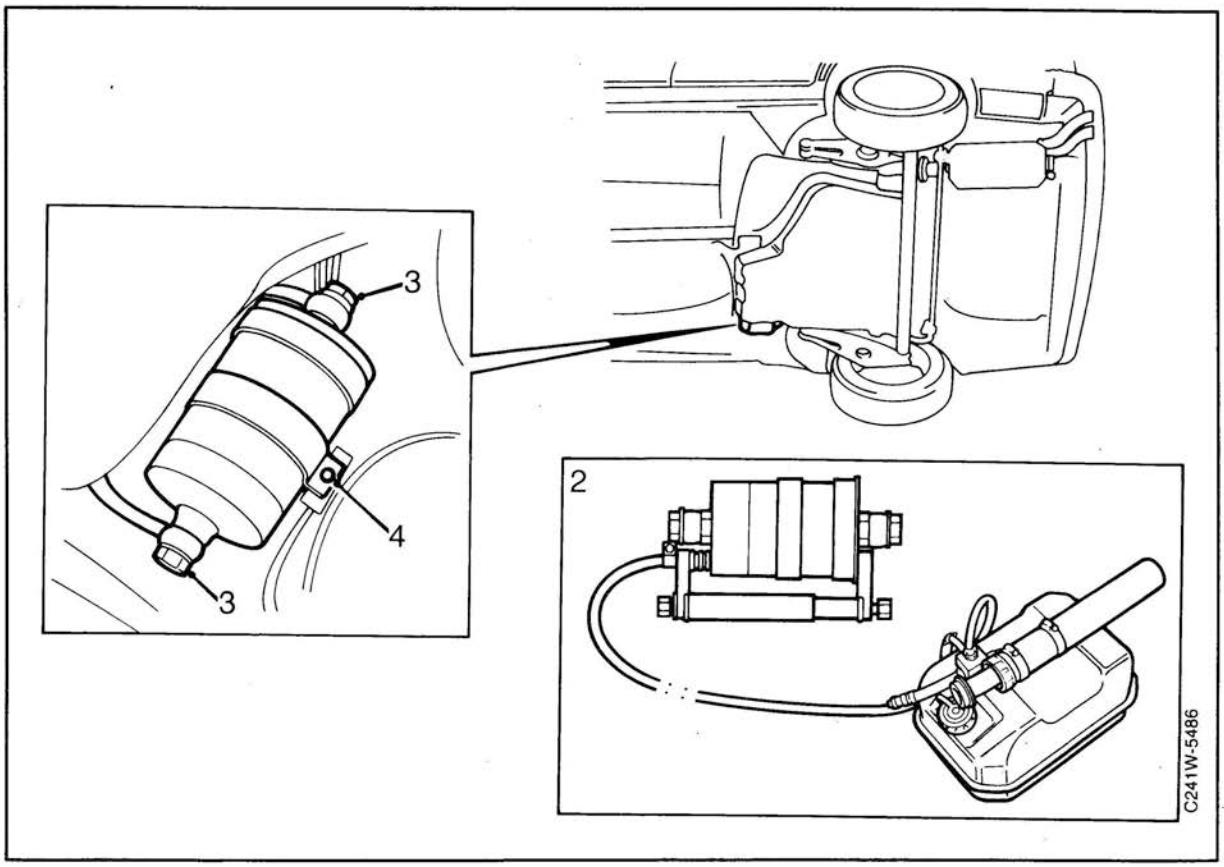

⚠ WARNING

Ensure good ventilation. If approved ventilation for removal of fuel fumes is available, this should be used.

Wear protective gloves. Long–term contact with fuel can cause skin irritation.

Keep a class BE fire extinguisher nearby. Be careful of the danger of sparking, e.g.from circuit breaking, short circuiting etc.

No smoking.

Removal

1 Wash and blow clean around both fuel connections. Place a container in a suitable place to collect the fuel that runs out.

2 Drain fuel from filter before removing.

3 Loosen both banjo connectors somewhat. Use hexagonal grip to hold them.

4 Remove the clamp and the banjo connectors.

Fitting

1 Connect the fuel filter loose to the banjo connectors with the arrow in the direction of flow.

2 Fit the clamp and tighten the banjo connectors using a hexagonal grip as a holder.

Tightening torque: 21 Nm (16 lbf ft).

3 Start the engine and check for leaks.

Important

Change the sealing washers before fitting.

Fuel filler pipe up to M1991

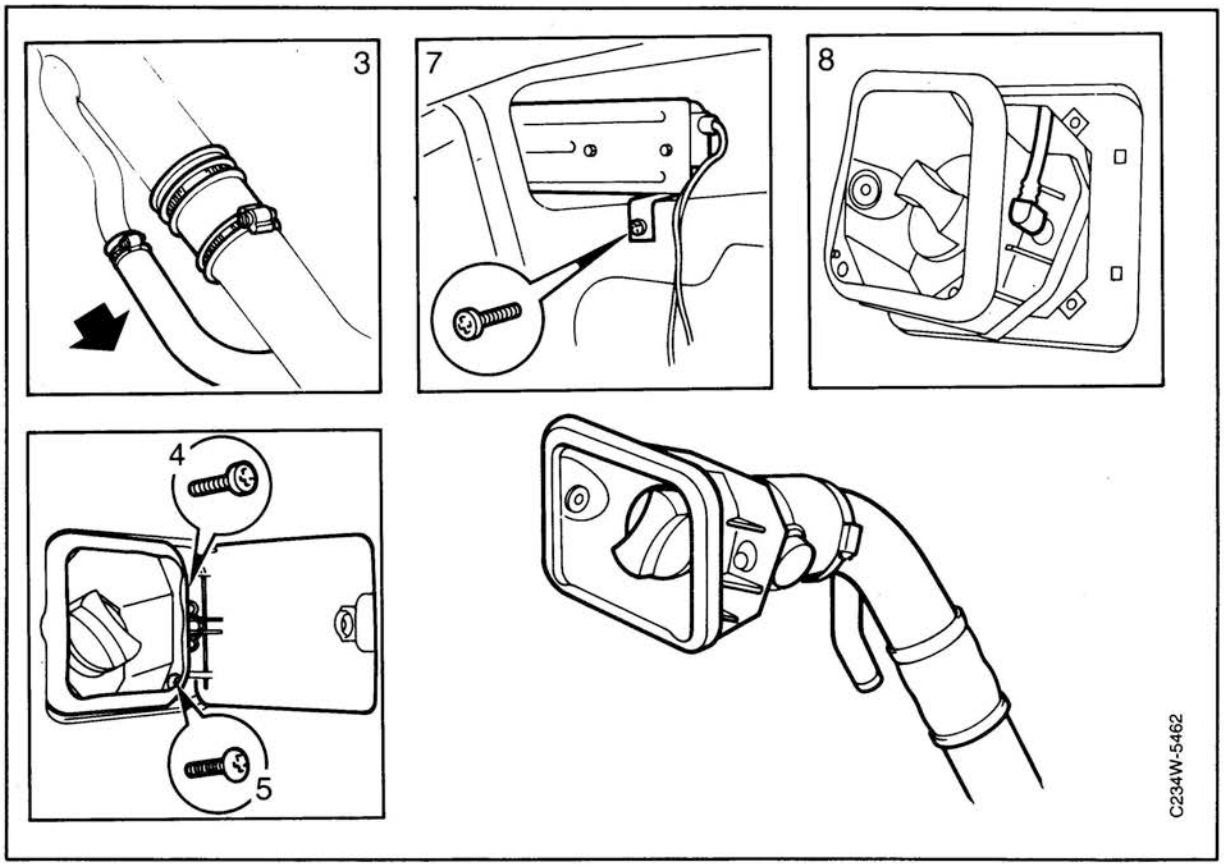

⚠ WARNING

Ensure good ventilation. If approved ventilation for removal of fuel fumes is available, this should be used.

Wear protective gloves. Long–term contact with fuel can cause skin irritation.

Keep a class BE fire extinguisher nearby. Be careful of the danger of sparking, e.g.from circuit breaking, short circuiting etc.

No smoking.

Removal

1 Raise the car and remove the RH rear wheel.

2 Clean around the filler pipe so that dirt does not get into the pipe or the tank.

3 Remove the rubber elbow connecting the filler pipe to the tank's integral pipe.

4 Remove the cover over the fuel filter cap.

5 Remove the screws securing the upper part of the filler pipe to the car body. Both the rear screws are the front fastening for the central lock unit.

6 Remove the trim on the RH wheel housing in the luggage compartment and lift up the rubber carpet.

Fuel filler pipe up to M1991 (contd.)

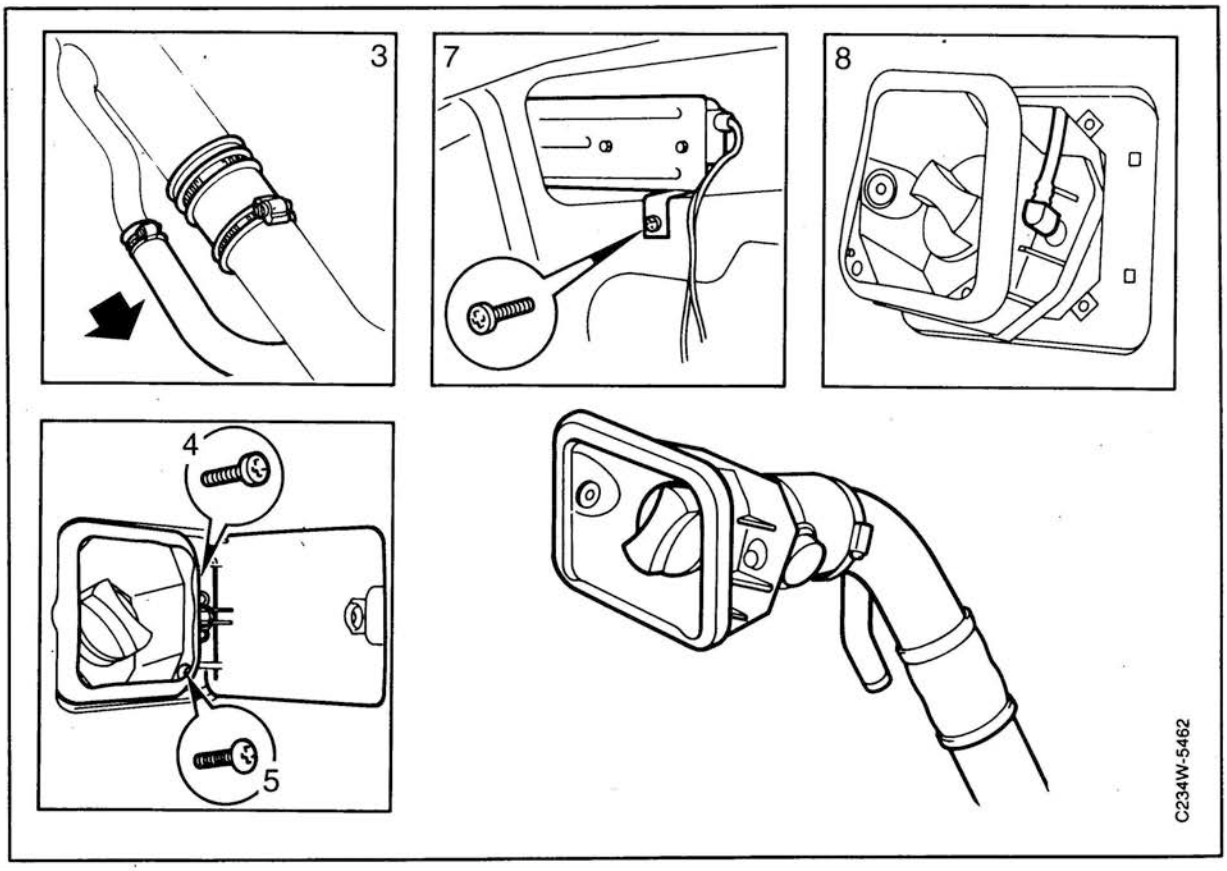

7 Undo the central lock unit retaining screw in the body and place the lock to one side.

8 Press out the rubber guard for the central locking piston to the edge of the panel. With one hand, grip the pipe from underneath the wing and twist it so that the roll–over valve at the front clears the edge of the body panel. Withdraw the pipe sufficiently to provide better access to disconnect the breather hose. Remove the hose fitting followed by the filler pipe. Release the clips carefully to avoid breaking them.

Fitting

Tightening torque for hose clips:
2 Nm (16 lbf ft).

Important

Danger of cracking if they are over–tightened.

Fitting is in reverse order.

Fuel filler pipe M1992–

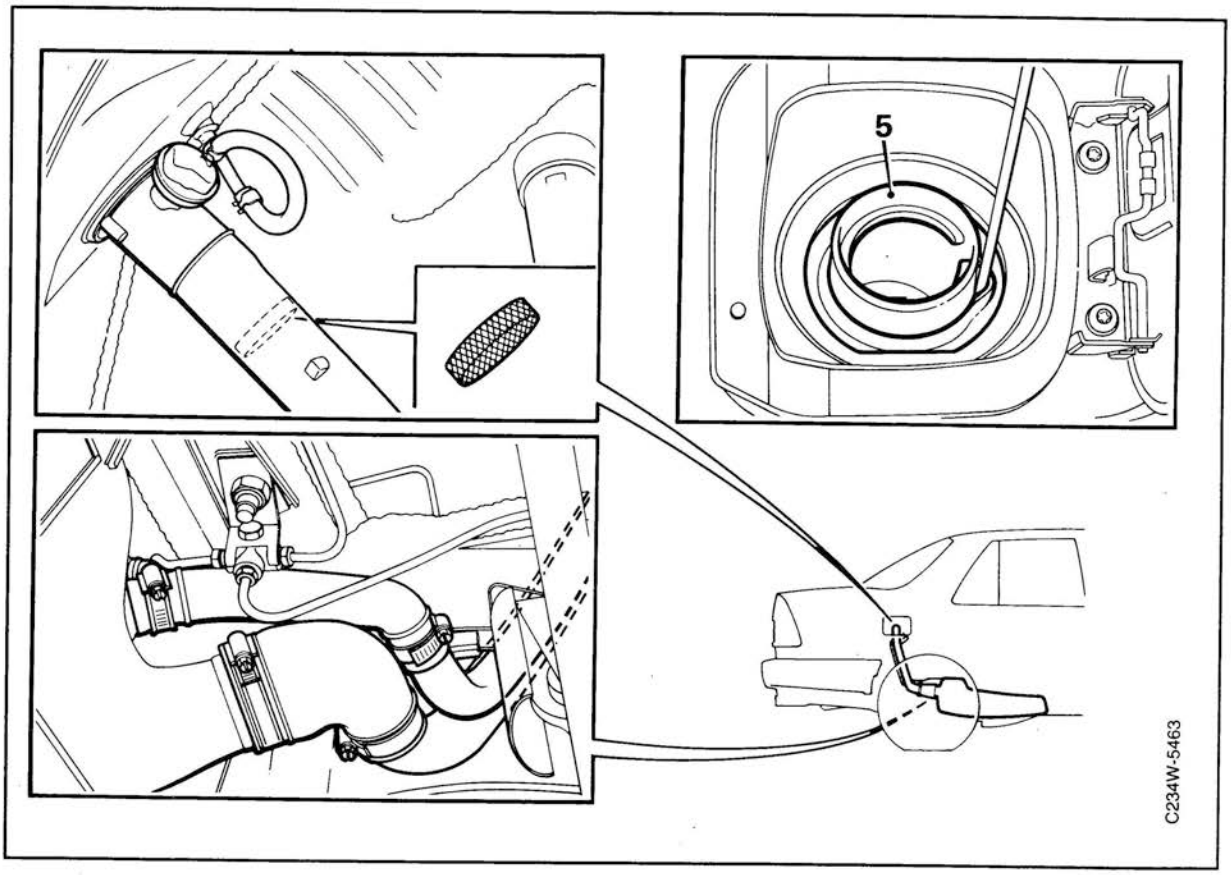

⚠ WARNING

Ensure good ventilation. If approved ventilation for removal of fuel fumes is available, this should be used.

Wear protective gloves. Long–term contact with fuel can cause skin irritation.

Keep a class BE fire extinguisher nearby. Be careful of the danger of sparking, e.g.from circuit breaking, short circuiting etc.

No smoking.

Removal

1 Raise the car and remove the RH rear wheel.

2 Clean around the filler pipe and its connections.

3 Remove the clip and disconnect the breather hose.

4 Undo the hose clips at the lower rubber elbow.

5 Unscrew the filler cap and withdraw the filler pipe.

Fitting

Tightening torque for hose clips:
2 Nm (16 lbf ft).

Important

Danger of cracking if they are over–tightened.

Fitting is in reverse order.

Bosch fuel pump, checking feed pump

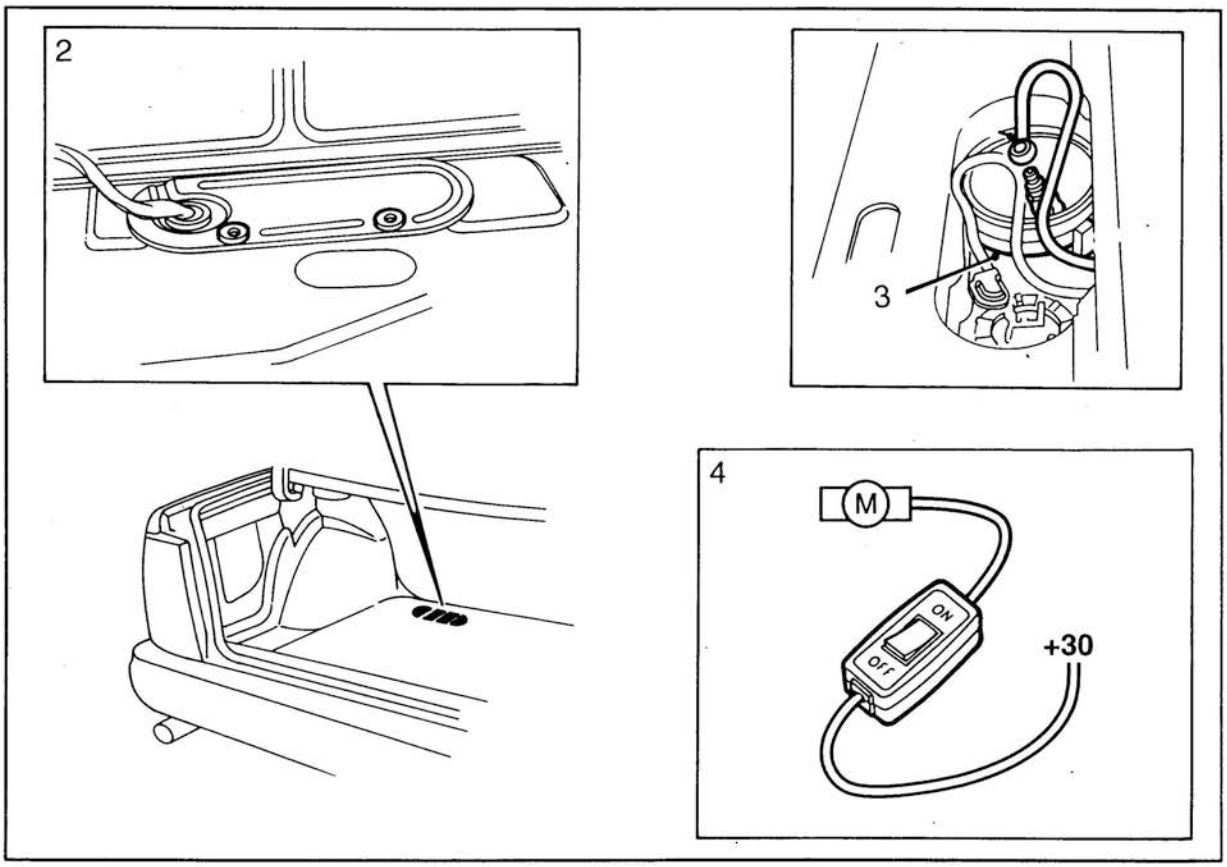

⚠ WARNING

Ensure good ventilation. If approved ventilation for removal of fuel fumes is available, this should be used.

Wear protective gloves. Long–term contact with fuel can cause skin irritation.

Keep a class BE fire extinguisher nearby. Be careful of the danger of sparking, e.g.from circuit breaking, short circuiting etc.

No smoking.

Removal

1 Fold up the rear part of the luggage compartment floor and undo both the bolts holding the floor.
Raise the floor.

2 Turn both the bayonet clips securing the cover over the fuel pump and remove the cover.

3 Remove the clip around the pump's sealing collar.

4 Start the fuel pump by connecting LH diagnostics cable 83 93 886 between +30 and the positive side of the fuse to the fuel pump so that there is voltage to the pump.

5 Start the feed pump by moving the switch to "ON".

⚠ WARNING

Large quantities of fuel can spray out and action should therefore be taken to prevent petrol from getting into the luggage compartment. If fuel escapes, make sure that you get rid of all vapour.

Bosch fuel pump, checking feed pump (contd.)

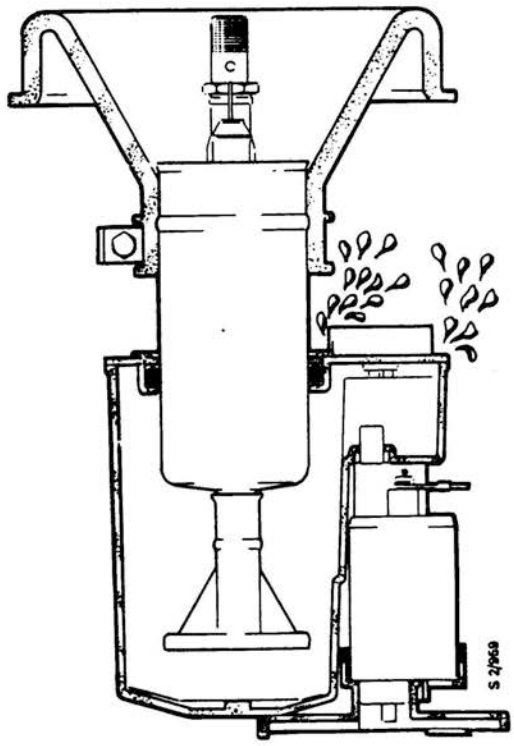

6 Carefully lift the lip of the rubber collar and check if petrol comes out of the safety valve at the top of the container.

7 If the feed pump is running but no fuel comes out of the safety valve, change the feed pump. If the feed pump is not working, check the leads to it.

Fitting

Fitting is in reverse order.

Important

The area around the aperture to the fuel tank must be dry before the fuel pump collar is clamped on.

Bosch fuel pump

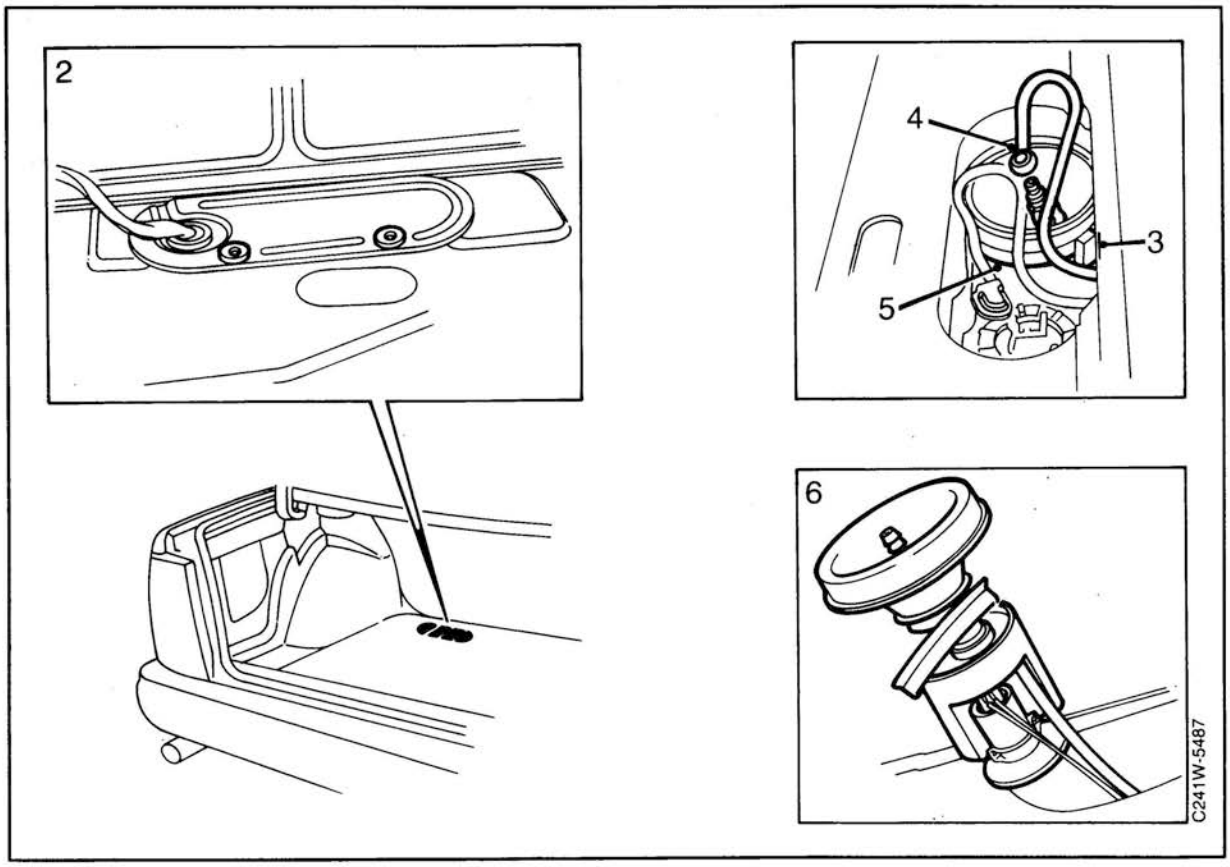

⚠ WARNING

Ensure good ventilation. If approved ventilation for removal of fuel fumes is available, this should be used.

Wear protective gloves. Long–term contact with fuel can cause skin irritation.

Keep a class BE fire extinguisher nearby. Be careful of the danger of sparking, e.g.from circuit breaking, short circuiting etc.

No smoking.

Removal

1 Fold up the rear part of the luggage compartment floor and undo both the bolts holding the floor.
Raise the floor.

2 Turn both the bayonet clips securing the cover over the fuel pump and remove the cover.

3 Unplug the electrical connections from the fuel pump, feed pump and fuel level sensor and place the cover to one side.

4 Undo and remove the fuel line banjo screw. Keep the washers.

5 Remove the clip around the pump's sealing collar.

6 Lift up the fuel pump and container. Disconnect the return fuel hose from the container.
Remove the electrical lead from the fuel pump via the grommet in the tank.

Bosch fuel pump (contd.)

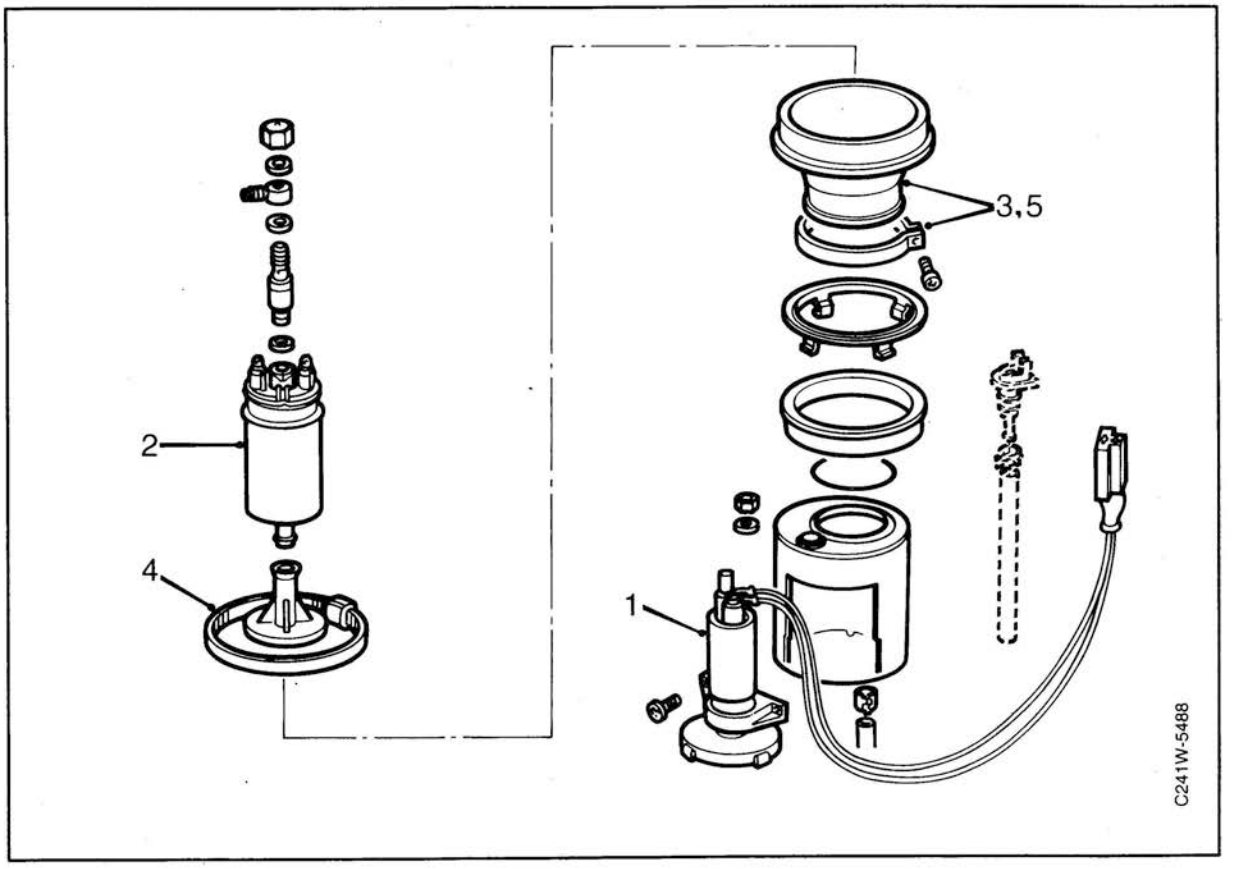

Dismantling the pump unit

1 Unscrew the feed pump strainer and remove the feed pump.

2 Lift the fuel pump out of the container.

3 Remove the clamp that holds the sealing collar and remove the pump from the collar.

4 Pull the strainer from the pump.

5 Unscrew the clamp from around the sealing collar and withdraw the pump.

Assembling the pump unit.

Assembly is in reverse order.

Bosch fuel pump (contd.)

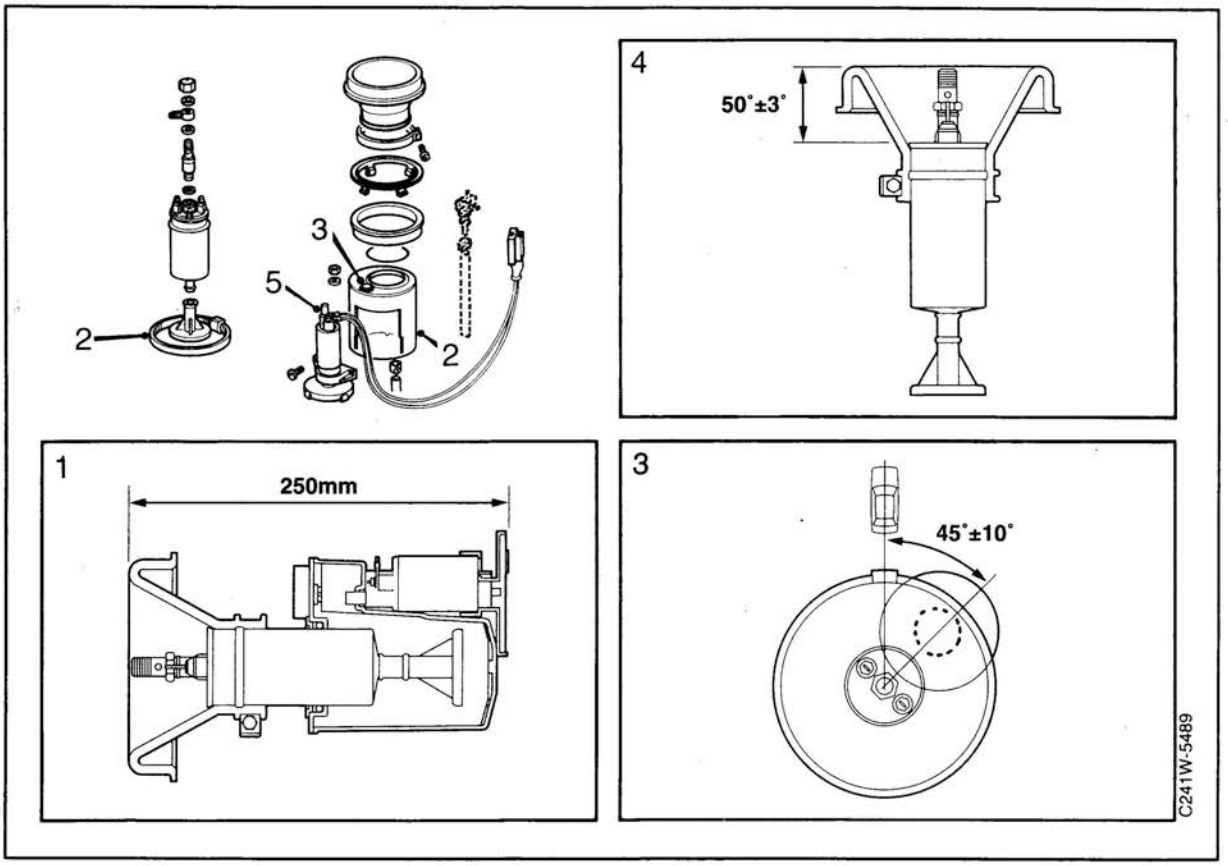

Fitting

1 Fit the sealing collar so that the lip protrudes 50 mm beyond the top edge of the pump.

Important

Both the height and the orientation of the pump are of great importance to pump capacity. Do not miss any of the test measurements.

2 Fit the suction strainer to the pump and fit the pump in the fuel container which should be fitted with a new O–ring.

3 Place the pump in the container so that the connections are aligned relative to the direction of travel of the car as shown in Fig. 1.
Adjust the position of the container in relation to the pump (45°).

4 Adjust the overall height of the pump to 250 mm (9.8 in).

5 Connect the return hose to the fuel container and attach the clamp. Connect the fuel pump electrical lead to the tank. Check the feed pump connections.
Place the pump unit in the fuel tank and point the mark on the sealing collar forward, in relation to the direction of the car.
Press down the sealing collar onto the collar of the tank.

6 Fit the clamp and tighten it.

7 Unscrew the fuel line banjo fitting onto the pump. Do not forget the washers.

8 Reconnect the leads to the fuel pump, feed pump and fuel level sensor.

9 Place cover in position and turn the bayonet fasteners to the locked position (see markings).

10 Refit luggage compartment floor and fit the retaining screws.

Walbro fuel pump, negative ejector

⚠ WARNING

Ensure good ventilation. If approved ventilation for removal of fuel fumes is available, this should be used.

Wear protective gloves. Long–term contact with fuel can cause skin irritation.

Keep a class BE fire extinguisher nearby. Be careful of the danger of sparking, e.g.from circuit breaking, short circuiting etc.

No smoking.

Important

Before starting work on the pump:

- release the pressure in the fuel system by undoing the nipple on the fuel filter. Retighten the nipple.

Removal

1 Release the fuel pump by removing the cover rail in front of the luggage compartment floor as well as the cover over the pump and fuel level sensor.

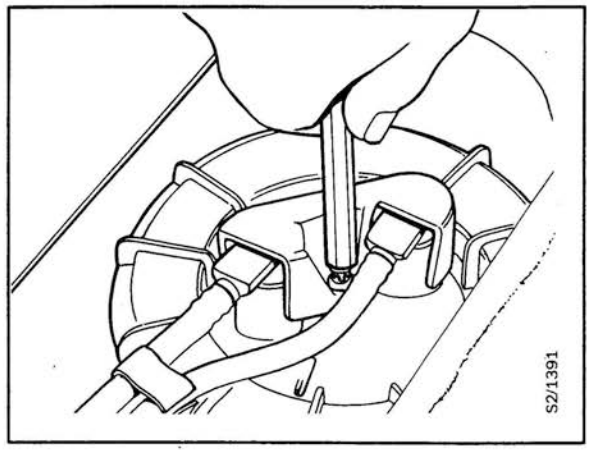

2 Disconnect the pump's electrical connection.

3 Remove the clamp and disconnect the fuel lines.

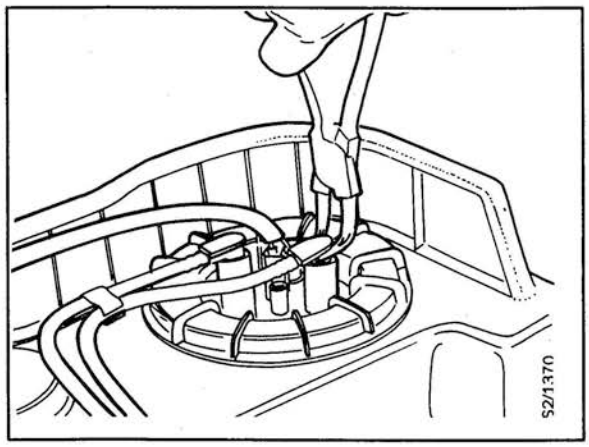

Important

Although fuel pressure has been reduced, a small amount of fuel will flow out of the connections.

Walbro fuel pump (contd.)

4 Tie the fuel lines to the floor panel with a plastic tie.

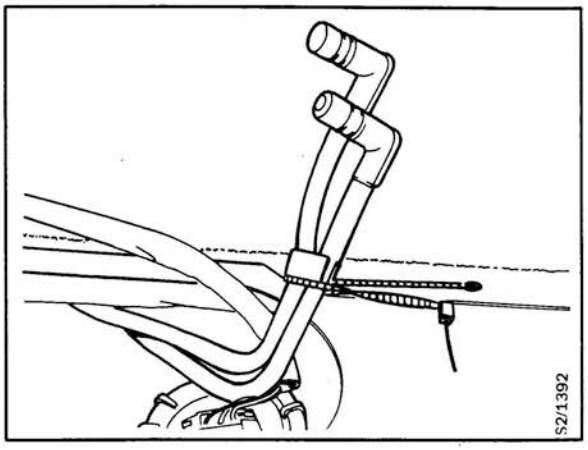

5 Fit tool 83 94 397 as illustrated.

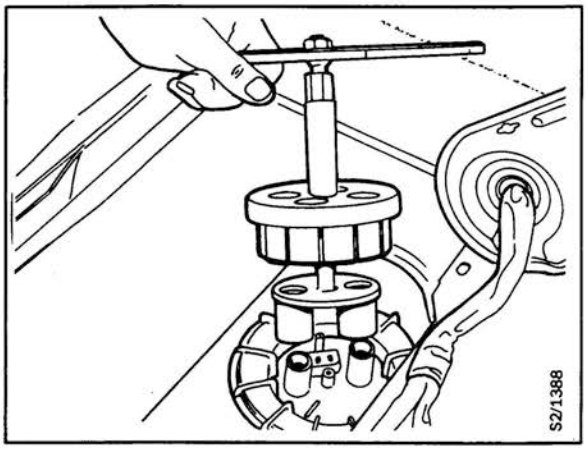

6 Pass the chain through the load–securing eyes and tighten it.

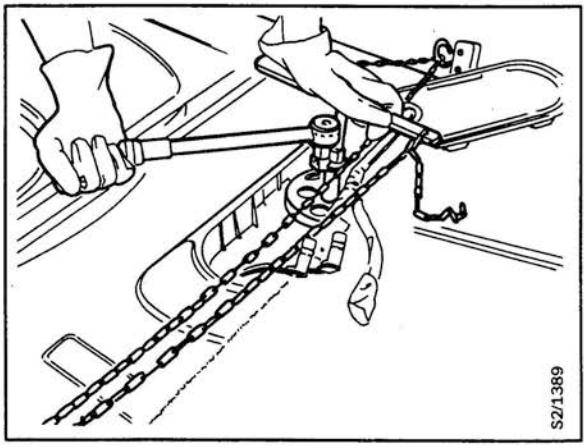

Walbro fuel pump (contd.)

7 Loosen the screw top and place the tool to one side.

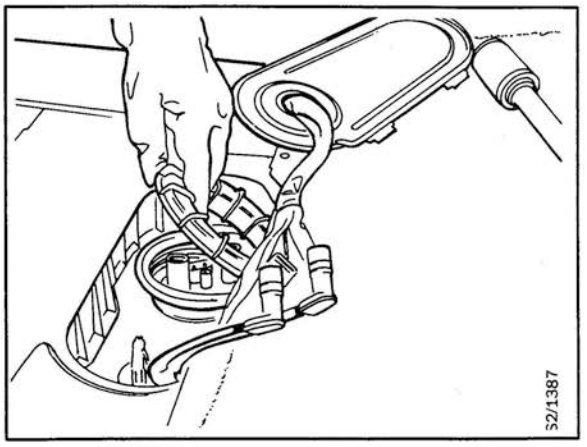

8 Undo the screw top by hand. Remove the rubber seal and raise the pump, tilting the top over to the right.

Lift the pump out of the tank and transfer it to a receptacle to collect the escaping fuel.

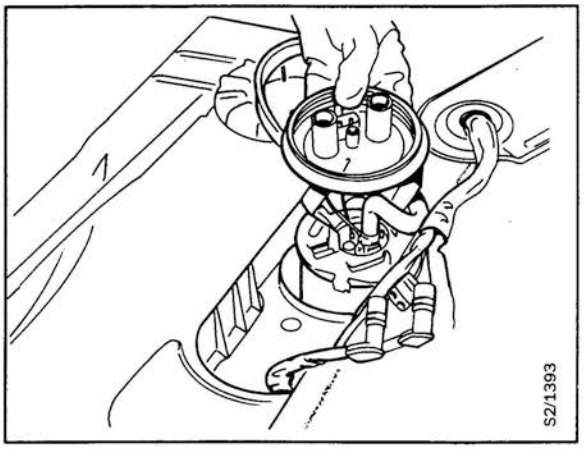

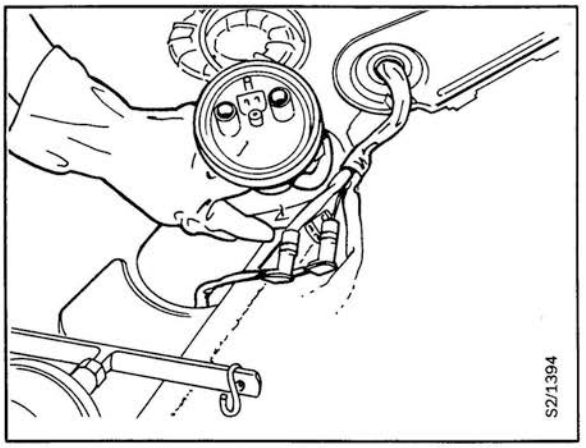

Walbro fuel pump (contd.)

Fitting

1 Place the pump in the correct position in the tank, centered between the ribs on the bottom of the tank and with **the mark on the top of the pump against the mark on the top of the tank.**

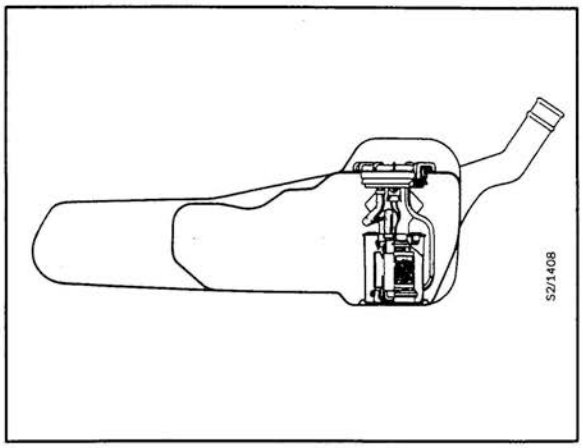

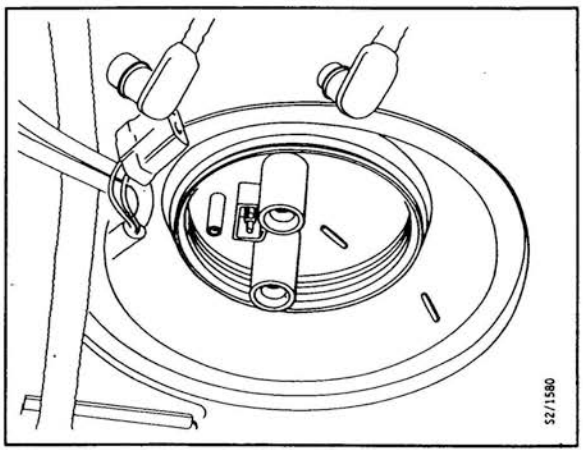

2 Lubricate a **new** rubber gasket with acid–free vaseline and place it in the screw top. Attach the top to the pump.

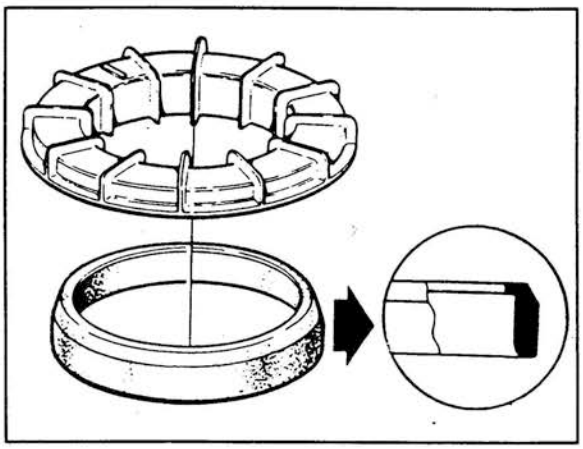

Walbro fuel pump (contd.)

3 Tighten the top several turns by hand.

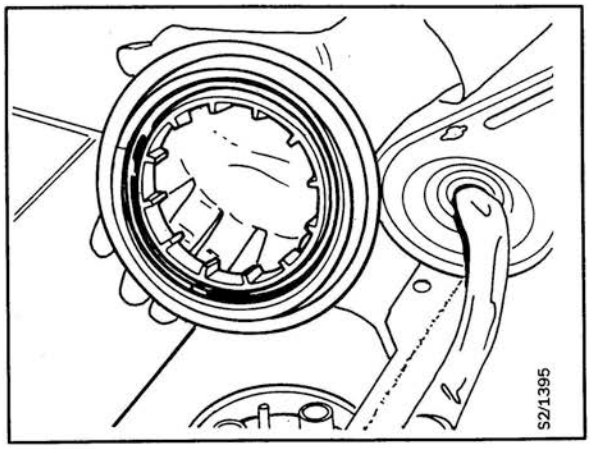

Important

To prevent danger of damage to the ejector pump, it is very important that the pump is in the correct position and not allowed to turn when the screw top is being tightened.

4 Tighten screw top with tool.
Tightening torque:75 Nm (55 lbt ft).

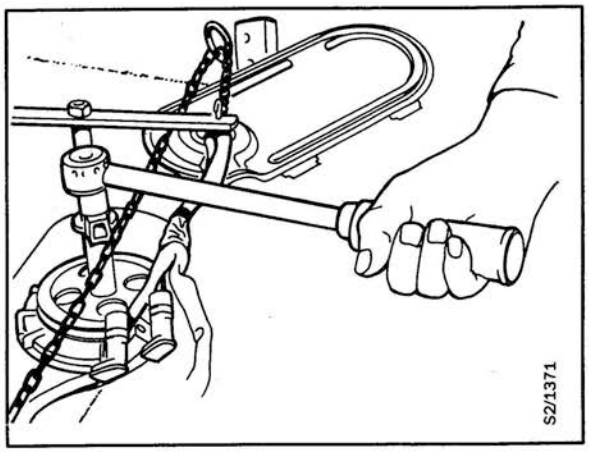

5 Connect the fuel lines with new O–rings on the connectors.
The return line with non–return valve in the fitting is connected to the outlet towards the rear of the car while the pump line is connected to the outlet towards the front of the car.

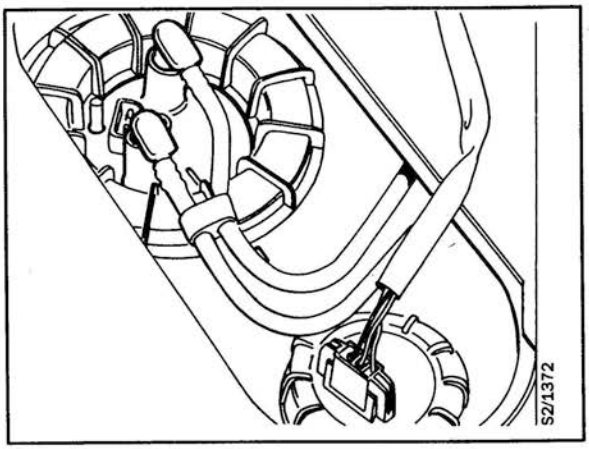

6 Connect the electrical cable and fit the cover.

7 Refit the luggage compartment floor and the cover rail and refit the backrest and seat cushions on the rear seat.

8 Check operation

Walbro fuel pump (contd.)

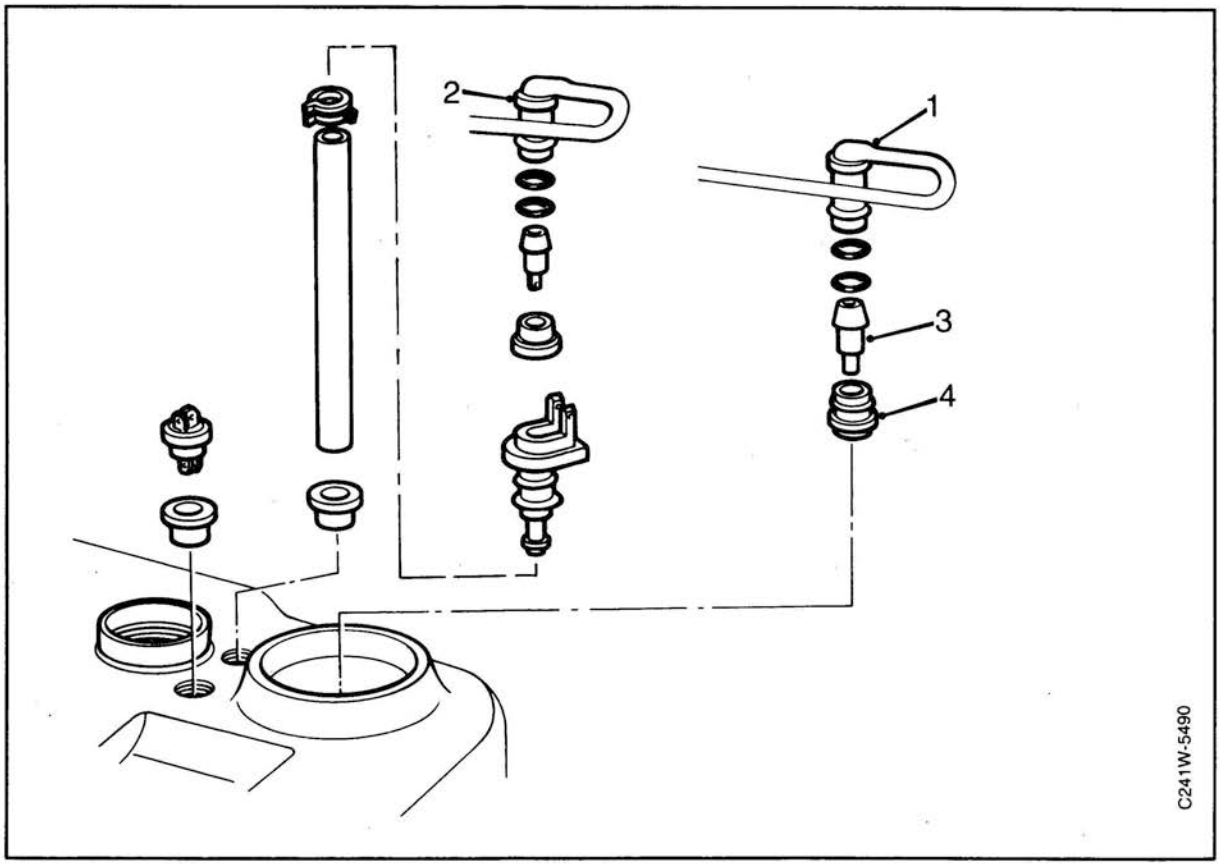

When changing the pump on cars M1988–90, the pump should be replaced with a pump with positive ejector.

M1988–90 up to chassis number
CL1020823
CL20114947

The pump should be replaced with a new pump with positive ejector 41 61 493. When fitting the new pump, a non–return valve must also be fitted in the fuel pump feed line.

The pump kit contains the necessary non–return valves, gaskets etc. For changing non–return valve, see page 65.

The problem has arisen that the non–return valve rubber gasket has come loose and blocked the aperture in the ejector pump.

When correcting this, the non–return valve is fitted with a plastic gasket, consisting of peg 8977761 and valve 8977779.

In production, the new plastic gasket was introduced in the non–return valve from the following chassis numbers:

YS3C....K1010559
YS3C....K2005307
YS3A....K3000518
YS3A....J3040029
YS3A....K7000190
YS3A....J7050129

Changing the seal in the roll–over valve

1 Free the return line connection on the lid of the fuel pump (1) or alternatively at the fuel tank (2), depending on design.

1 Return line with non–return valve in fitting (connection in pump lid).
2 Return line with non–return valve in fitting (connection in tank)
3 Peg 89 77 761
4 Valve 89 77 779

Walbro fuel pump (contd.)

2 Remove the valve part from the fitting. Use a small screwdriver and carefully break along the joint.

3 If the valve part has no non–return valve, the pump unit must be lifted out of the tank and the ejector pump must be blown clean to remove any remains of the valve.

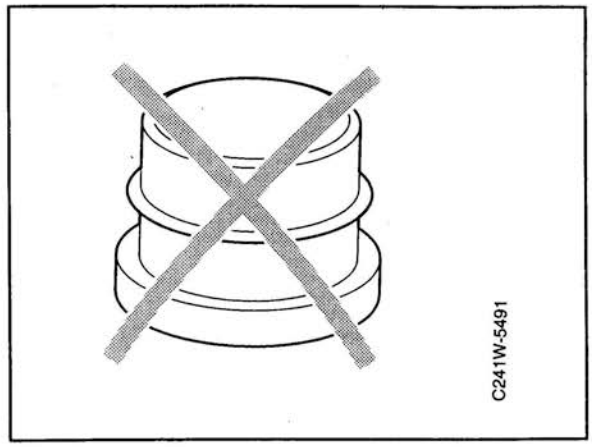

4 Place the new peg in the valve and press the valve into the return line fitting. The groove should click into place when the valve flange is against the fitting.

5 Fit new O–rings to the fitting before connecting to the pump.

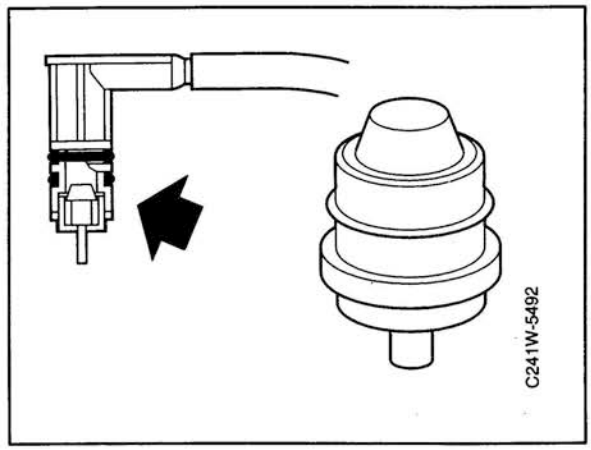

Walbro fuel pump (contd.)

Dismantling Walbro pump filter and container.

Filter and container are one unit and should be replaced at the same time.

1 Remove the fuel pump.

2 Free the ejector pump from the container by using a small screwdriver to lift the small lugs holding the side of the ejector pump.

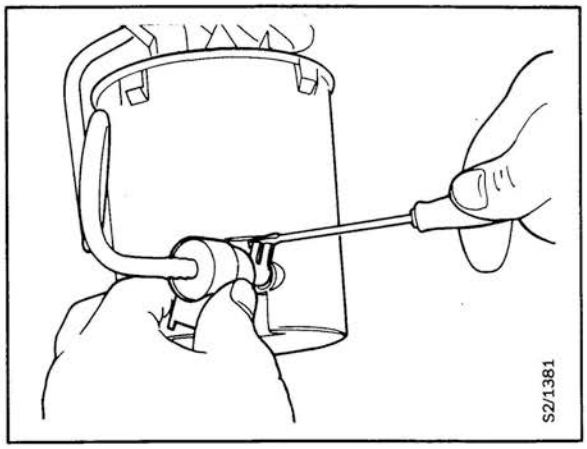

3 Rotate the ejector pump 90° and withdraw it.

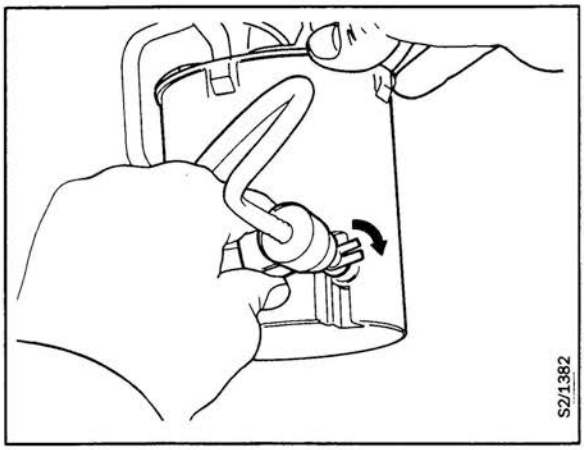

4 Detach the container complete with filter from the lid and separate the unit.

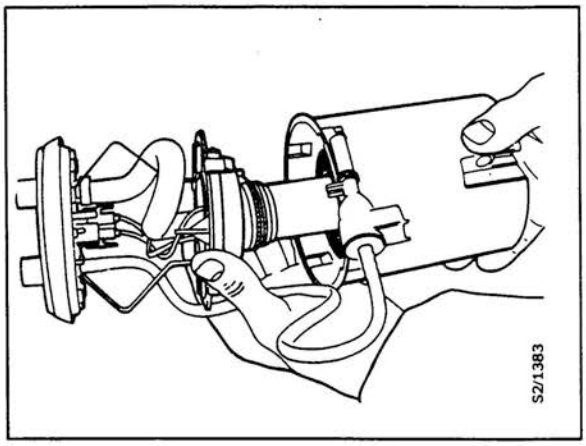

Walbro fuel pump (contd.)

Dismantling Walbro pump filter and container (contd.)

5 Assemble the pump unit with a new container including filter and O–ring.

6 Fit the ejector pump with a new O–ring.
Align the pump in position with the lugs outward.
Rotate the pump 90° so that the lugs engage the dog on the container.

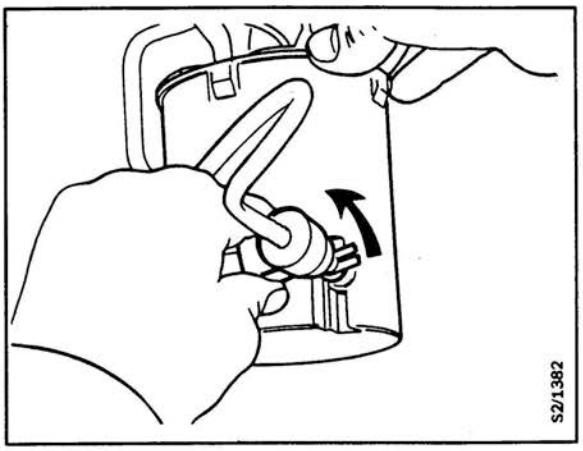

7 Fit the fuel pump, see "Fitting the fuel pump".

Walbro fuel pump (contd.)

Blowing the ejector pump clean

1 Remove the fuel level sensor to release the pressurized air and to check the position of the ejector pump.
Undo the return fuel line connector from the pump cover. Blow compressed air into the pump's return line. If this does not help, dismantle the fuel pump.

2 Detach the ejector pump from the container by lifting the small lugs securing the sides of the ejector pump using a small screwdriver.

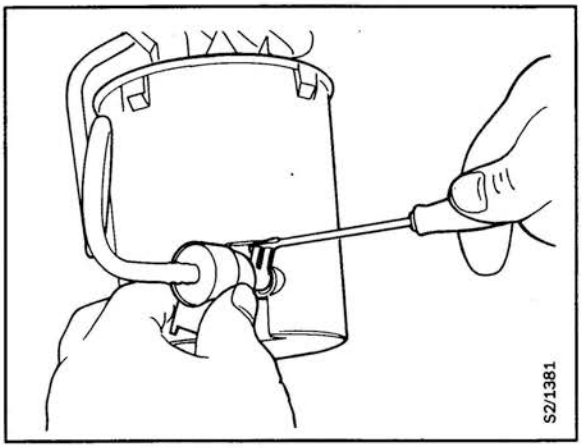

3 Rotate the ejector pump 90° and pull it straight out.

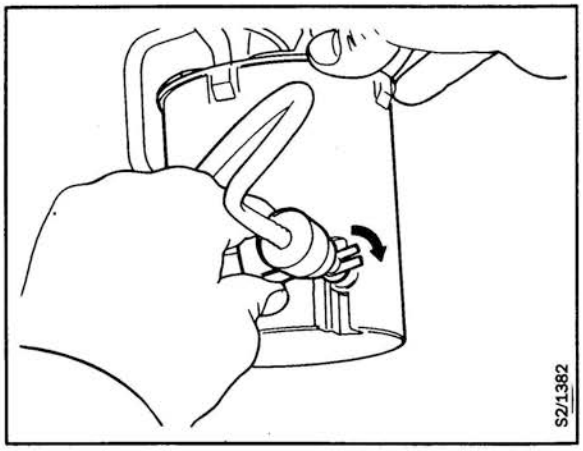

4 Blow compressed air into the nozzles to remove and contamination.

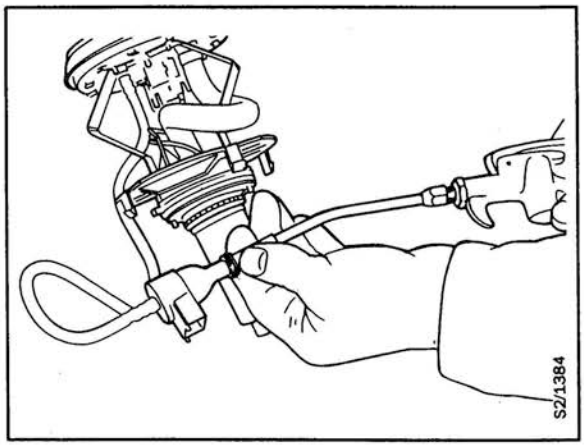

Important
Always use new O–rings when fitting.

5 Assemble and fit pump.

6 Check operation.

Walbro fuel pump (contd.)

Changing feed hose

1 Open the clips using a screwdriver and carefully unscrew the hose without damaging the fittings.

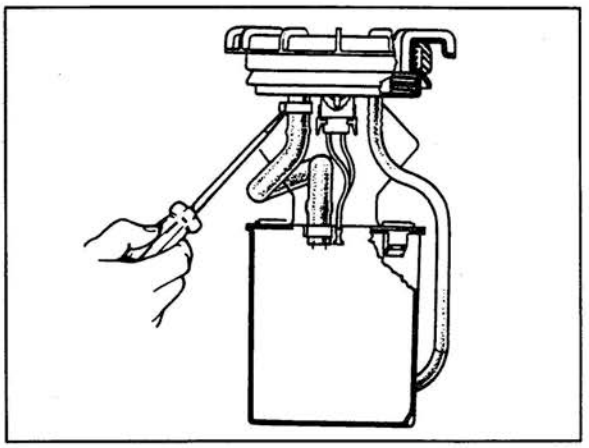

2 Thread on hose clips and fit the new hose. The ends of the hose may be dipped in soap solution to make them easier to fit.

3 Tighten the hose clips and at the same time make sure that the screw on the lower clip does not touch the electrical leads and that the position of the hose is correct.

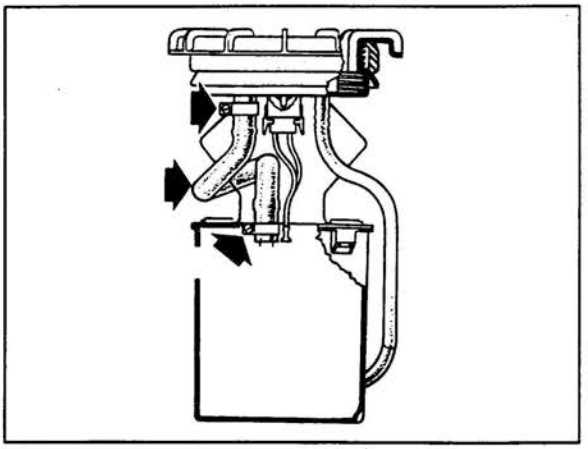

Walbro fuel pump, positive ejector

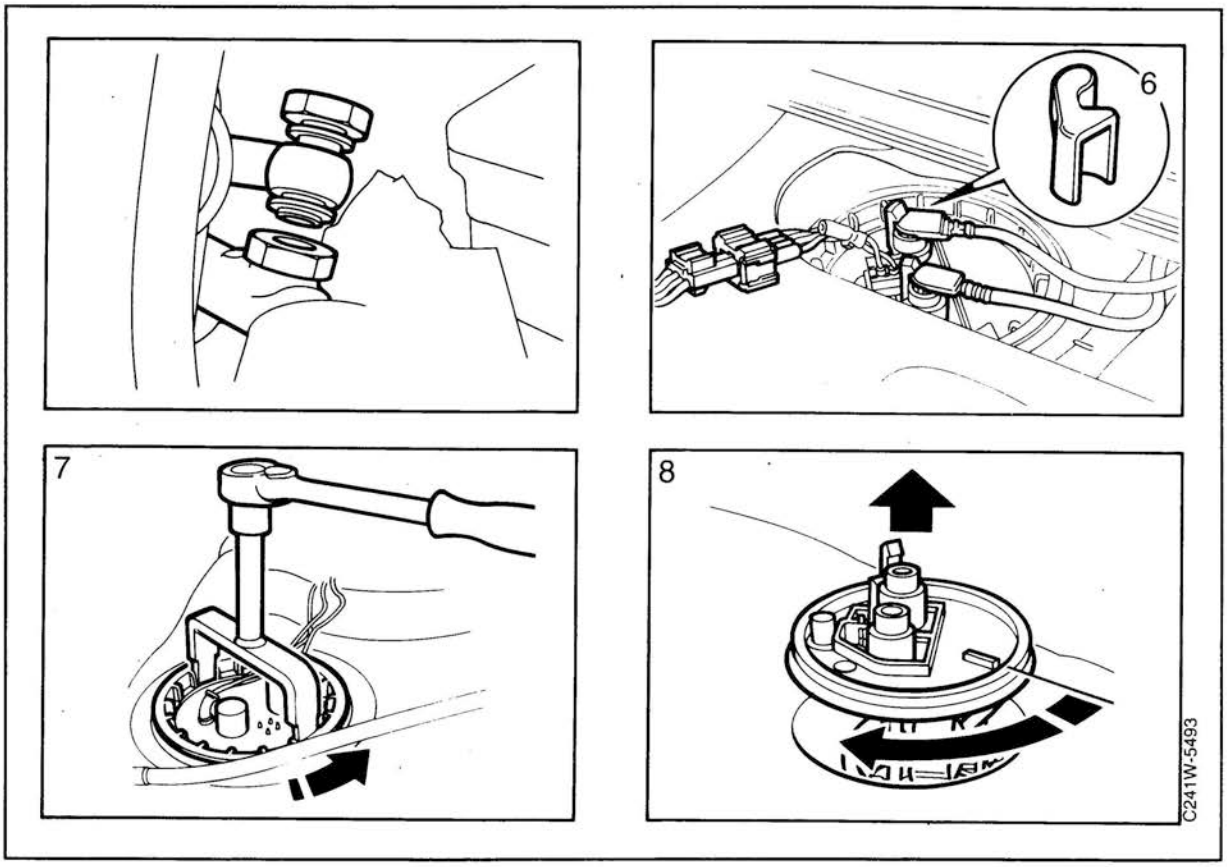

⚠ WARNING

Ensure good ventilation. If approved ventilation for removal of fuel fumes is available, this should be used.

Wear protective gloves. Long–term contact with fuel can cause skin irritation.

Keep a class BE fire extinguisher nearby. Be careful of the danger of sparking, e.g.from circuit breaking, short circuiting etc.

No smoking.

Important

Before starting work on the pump:

- Release the pressure in the fuel system by loosening the fitting on the fuel rail.
- Mop up any fuel using paper or a cloth.
- Re–tighten the fitting.

Removal

1 Remove the parcel shelf and fold the backrest forward (not CD).

2 Remove the cover rail.
On CD cars: with small screwdriver bit.

3 Fold up the rear portion of the luggage compartment floor.Remove the two floor retaining screws and remove floor.

4 Detach the pump cover and move it to one side.

5 Remove the locking pin and unplug the connector.

6 Disconnect the fuel lines from the pump. Move them to one side and attach them under the panel recess.

7 Remove the screw top. Use special tool 83 94 462.

8 Carefully lift the pump while tilting the upper part to the right. Keep some paper or a cloth at hand to mop up any spilled fuel.

9 Transfer the pump to a suitable receptacle and pour off the fuel.

Walbro fuel pump, positive ejector (contd.)

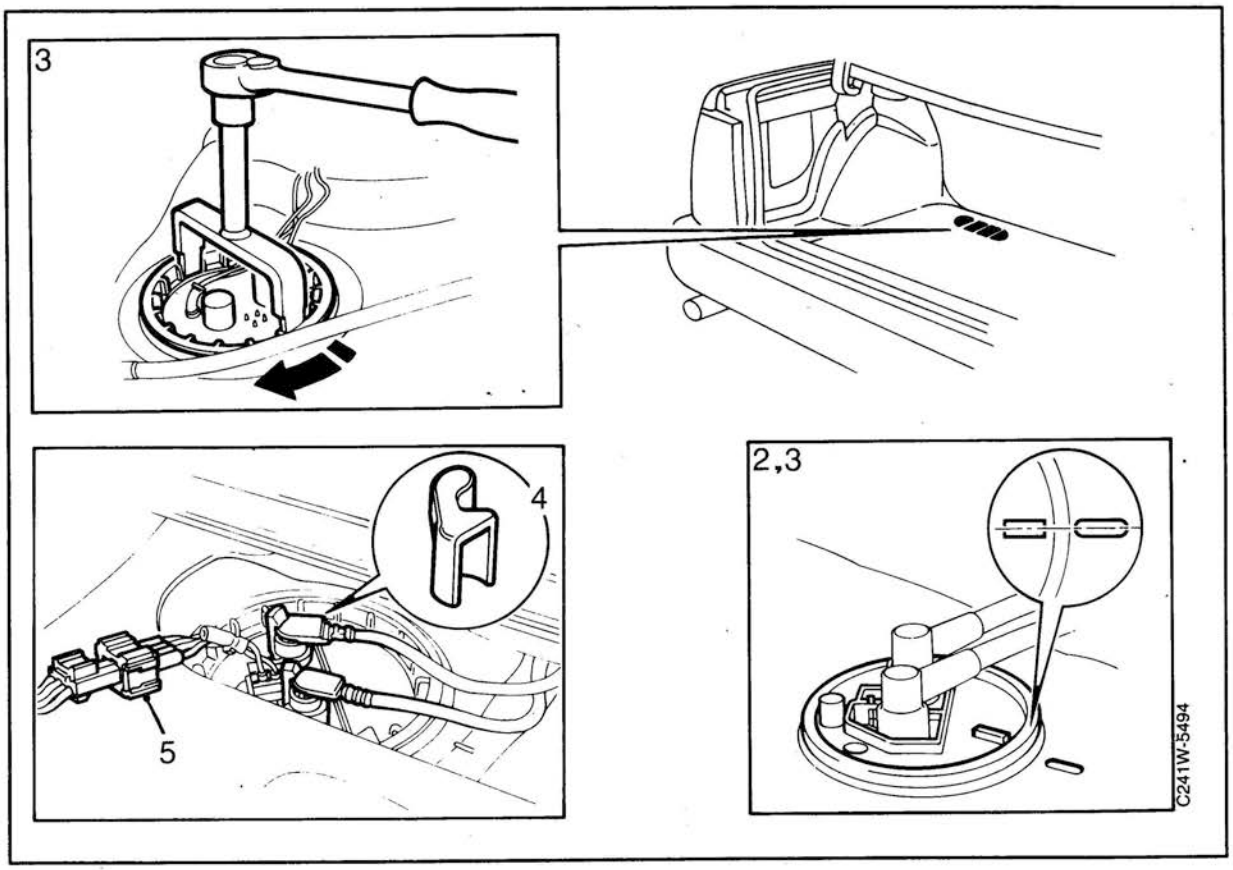

Fitting

1 Fit a new O–ring seal to the attaching groove in the tank.

Important

It is essential to the operation of the fuel level sensor that the pump unit in placed in the correct position.

2 Place the pump unit in the tank with the position indicators aligned.

3 Fit and tighten the screw cap using tool 83 94 462 and torque wrench.
Tightening torque: 75 (55 lbf ft)

Check that the positioning marks are still aligned.
Positioning marks pump cap–tank within ± 5°.

4 Check O–rings on fuel line fittings and connect these to the pump.

5 Plug in the connector and fit the locking pin.

6 Check that the pump works properly and that it does not leak.

7 Fit the cover and the luggage compartment floor.

8 Fit the cover rail and replace the backrest.

Walbro fuel pump, positive ejector (contd.)

Changing the non–return valve

1 Release the fuel pump.

2 Cap the fuel line with the pump fitting as shown in Fig.

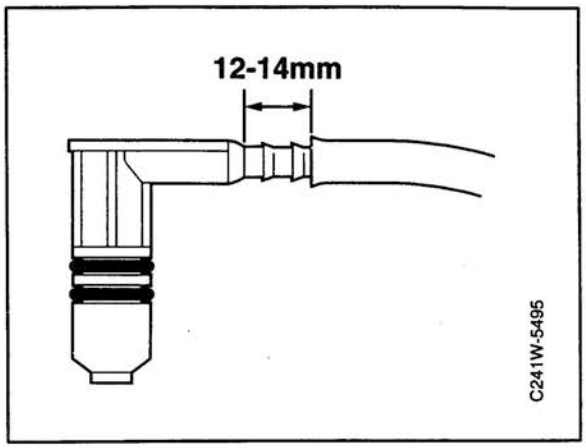

3 Fit special tool 83 94 546 to the fuel line.

4 Press the new non–return valve 41 61 766 into the line with the fitting facing the pump.

5 Fit new O–rings 79 74 546 onto the valve

6 Connect wiring and fuel lines. Fit the locking pin.

7 Check the residual pressure to see if the non–return valve was the cause of the fault.

8 Start the car and check that the pump works properly and does not leak.

9 Refit all other components that have been removed.

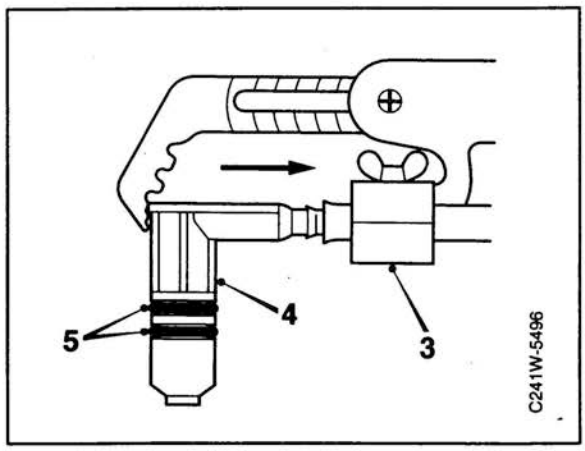

Changing Filter and container on Walbro pump

See Walbro fuel pump, negative ejector.

Blowing the ejector pump clean

See Walbro fuel pump, negative ejector.

Checking fuel gauge float arm position

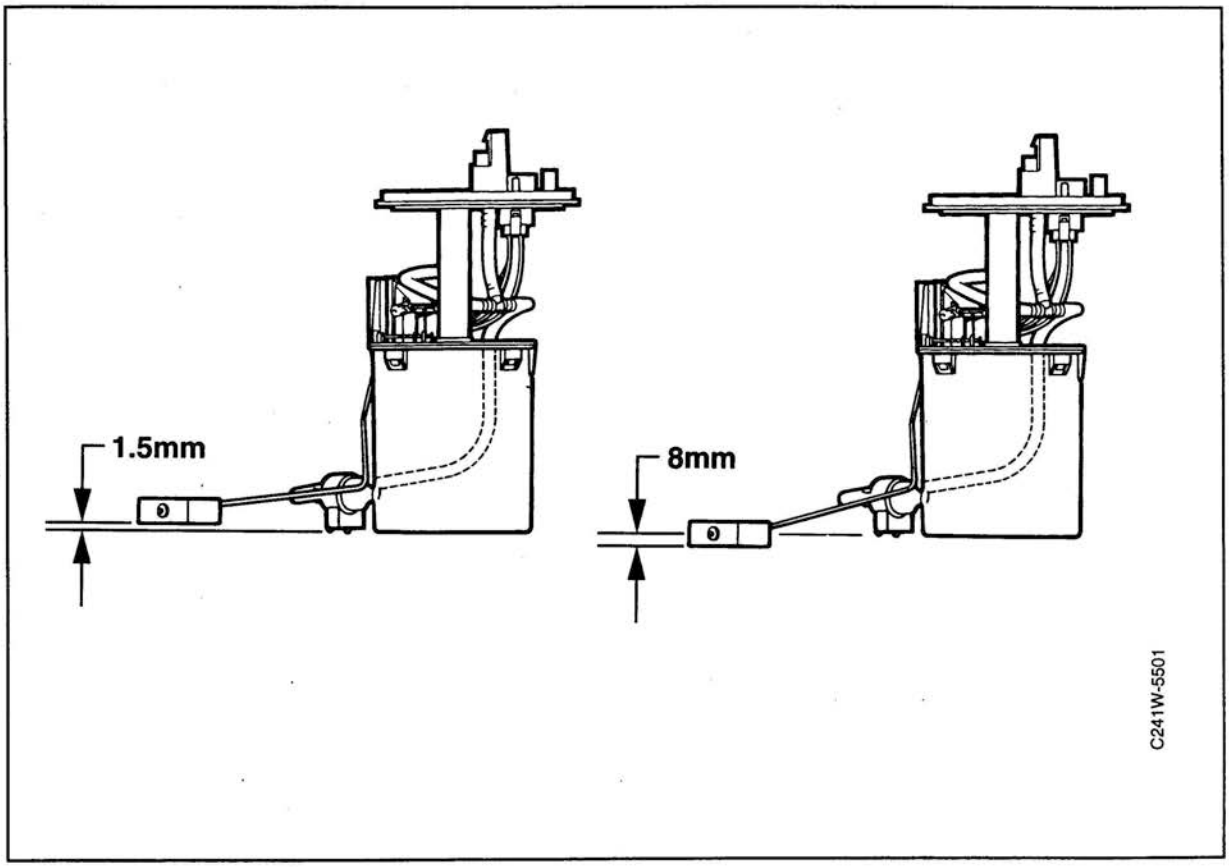

Year model M1990–1991

When the tank is on a level surface, the distance between the surface and the underside of the float arm should be **1.5 mm**.

The resistance across the sensor should be:
Empty tank, float arm in lowest position
30–40 Ohms
Full tank, float arm in uppermost position
340–360 Ohms

Year model M1992–

When the tank is on a level surface, the distance between the surface and the underside of the float arm should be **8 mm**.

The resistance across the sensor should be:
Empty tank, float arm in lowest position
28–38 Ohms
Full tank, float arm in uppermost position
360–380 Ohms

Checking fuel pump capacity

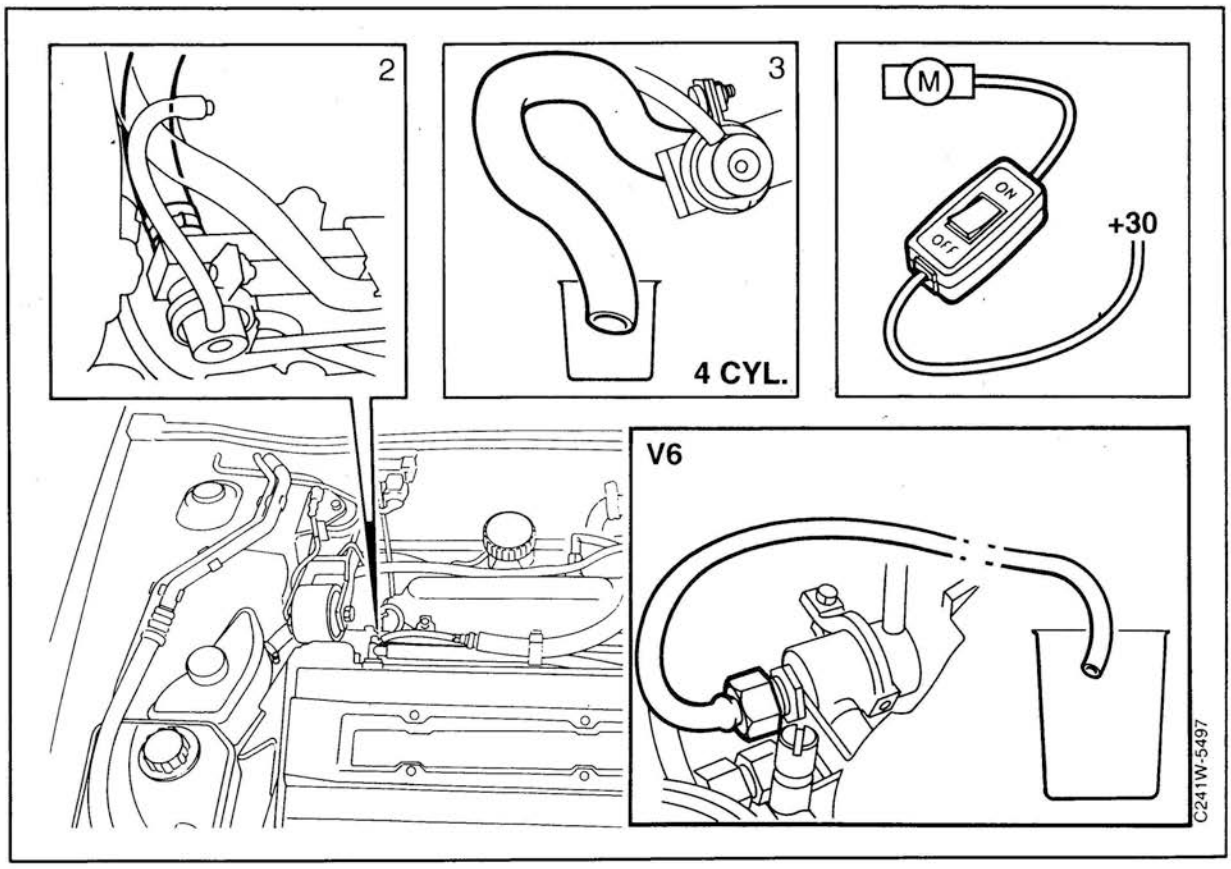

1 Open the glove compartment and remove the cover over the fuse board. Connect LH diagnostics cable 83 93 886 between +30 and the positive side of the fuse to the fuel pump so that there is voltage to the pump.

2 Switch the switch to "OFF". Disconnect the return hose from the pressure regulator.

3 **4 Cyl:**
Fit a test hose (part No. 83 94 405) to the return flow. Place the free end in a 2 l measuring beaker.
6 Cyl:
Connect adapter with hose (special tool No. 83 94 744) tho the fuel rail return. Place the hose in a receptacle.

4 Start the fuel pump by turning the switch to "ON". Measure the flow capacity of the fuel pump by allowing it to run for 30 seconds. The volume of the Bosch pump should be 0.9 l and the Walbro pump 0.7 l.

Important

During all work that involves the disconnection of the fuel line, great care must be taken with cleanliness.

Fuel rail with injectors 2.3i and 2.0i M1994–

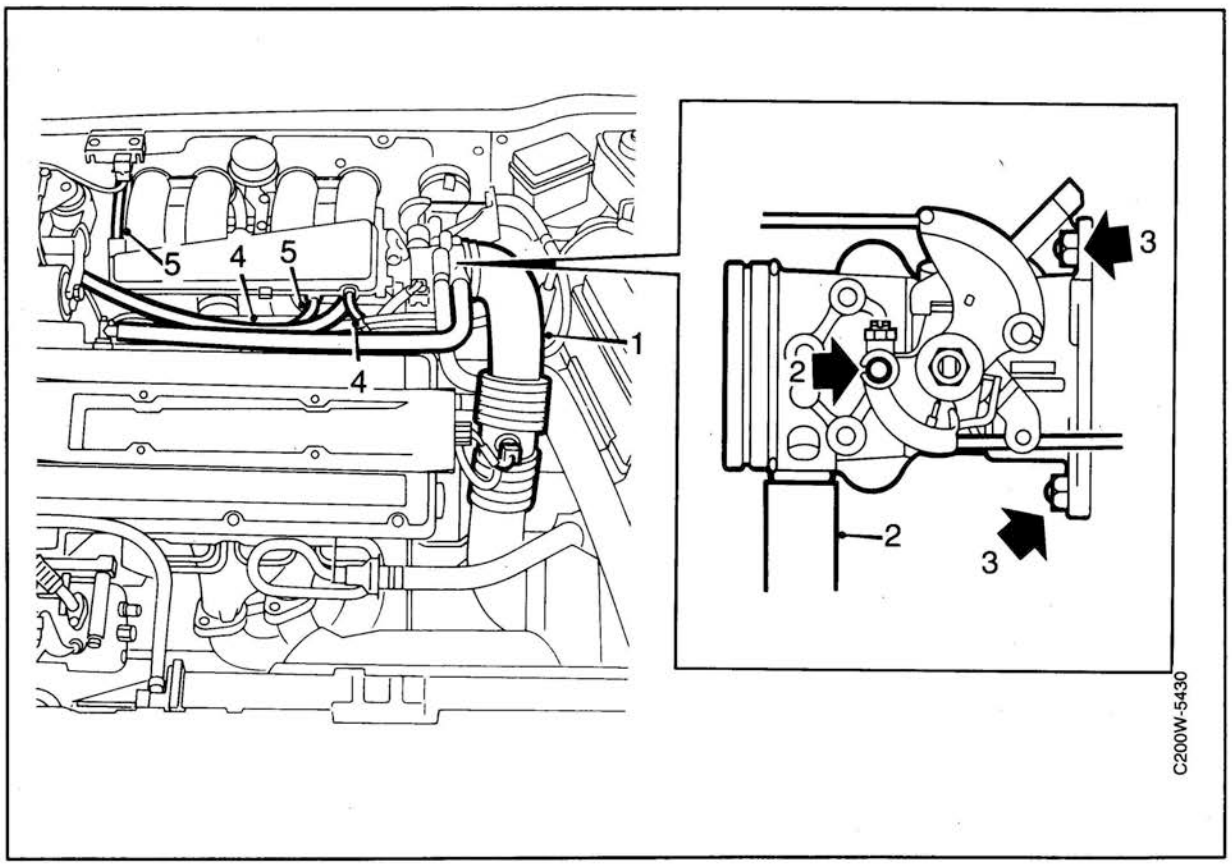

⚠ WARNING

Ensure good ventilation. If approved ventilation for removal of fuel fumes is available, this should be used.

Wear protective gloves. Long–term contact with fuel can cause skin irritation.

Keep a class BE fire extinguisher nearby. Be careful of the danger of sparking, e.g.from circuit breaking, short circuiting etc.

No smoking.

Important

When working on the fuel rail and injectors, take great care to keep everything clean.
Wash around the valves, fuel rail and intake manifold and blow clean with compressed air.

Removal

1 Remove the plastic pipe between the throttle body and the resonator.

2 Disconnect the idle air control valve hose from the throttle body and the cruise control cable from the throttle.

3 Undo the nuts and detach the throttle body.

4 Disconnect the vacuum hose from the pressure regulator as well as the narrow crankcase ventilation hose from the intake manifold.

5 Disconnect the evaporative emission canister vacuum hose from the intake manifold as well as the hose to the MAP sensor.

Fuel rail with injectors 2.3i and 2.0i M1994– (contd.)

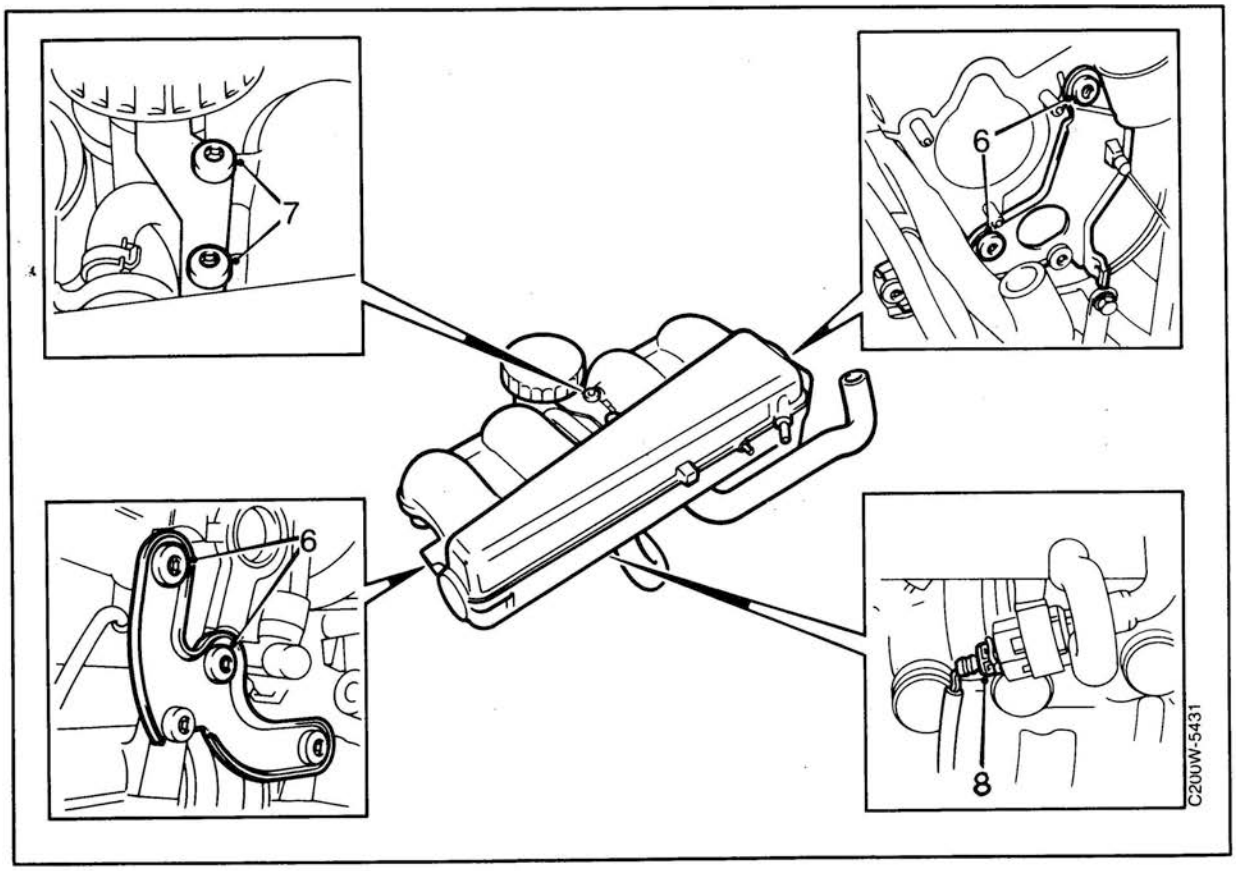

6 Remove the two retaining screws on the sides of the upper half of the intake manifold and slightly loosen the lower ones.

7 Remove the oil filler pipe bracket and the remaining screws on the upper half of the intake manifold.

8 Lift off the upper half of the intake manifold and unplug the idle air control valve connector.

Fuel rail with injectors 2.3i and 2.0i M1994– (contd.)

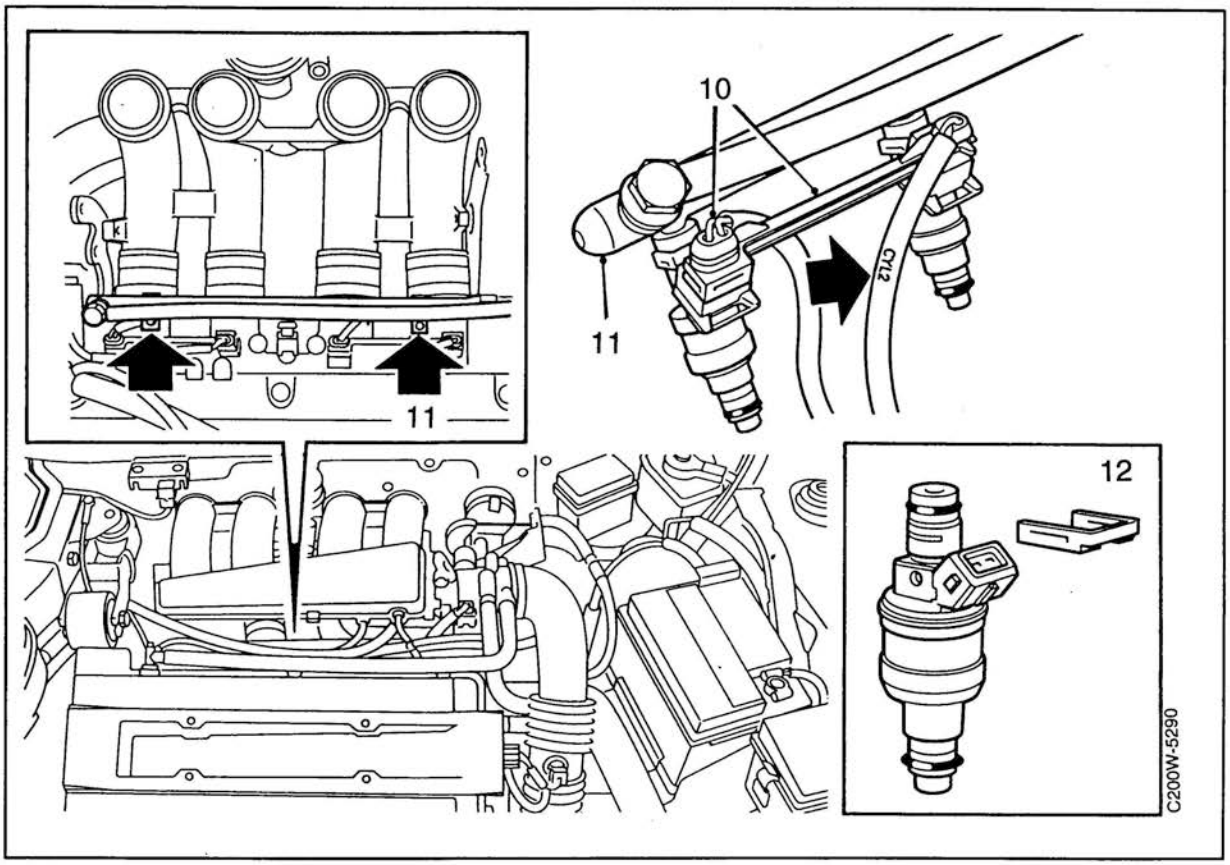

9 Carefully clean the areas around fuel connections and injectors.

10 Remove the two fixing rails and disconnect the injector connectors.

11 Remove the fuel rail retaining screws and lift up the fuel rail complete with injectors.
Make sure that there is paper or similar to hand in order to mop up the fuel that comes out of the fuel rail or injectors.

12 Remove the injector retaining clips and remove the injectors.

Fitting

Fitting is in reverse order.

Check the rubber hoses between the two halves of the intake manifold as well as the O–ring on the throttle body.

Note

Lubricate the O–rings with vaseline to make it easier to fit them.

Check that the correct connector is connected to the correct injector. The wiring is marked.

Fuel rail with injectors 2.3T and 2.0T M1994–

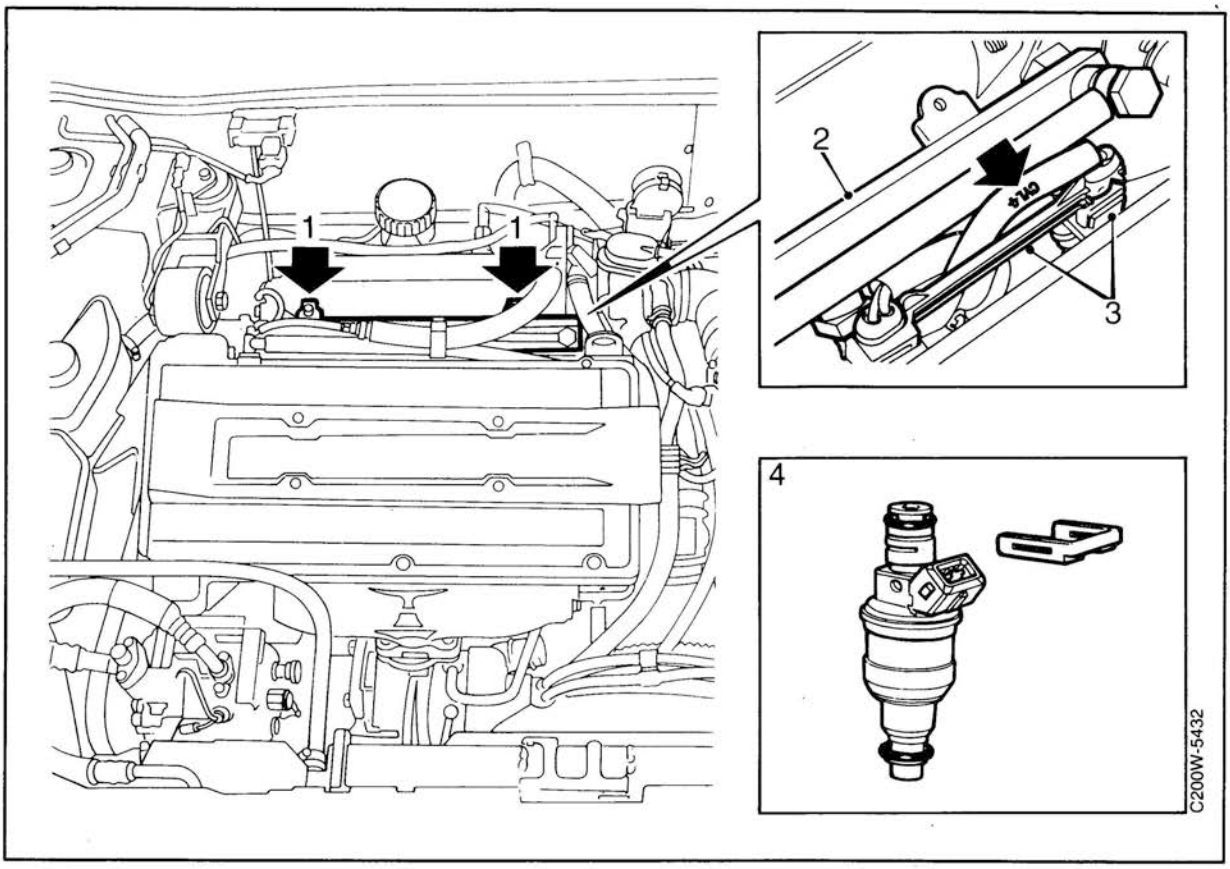

⚠ WARNING

Ensure good ventilation. If approved ventilation for removal of fuel fumes is available, this should be used.

Wear protective gloves. Long–term contact with fuel can cause skin irritation.

Keep a class BE fire extinguisher nearby. Be careful of the danger of sparking, e.g.from circuit breaking, short circuiting etc.

No smoking.

Important

When working on the fuel rail and injectors, take great care to keep everything clean.
Wash around the valves, fuel rail and intake manifold and blow clean with compressed air.

Removal

1 Remove the screws from the fuel rail.

2 Carefully lift the fuel rail complete with injectors. Ensure that there is paper or the like at hand in order to mop up fuel from the fuel rail or injectors.

3 Remove the two fixing rails and unplug the injector connectors.

4 Remove the locking clips holding the injectors to the fuel rail and withdraw the injectors.

Fitting

Fitting is in reverse order.

Note
Lubricate the O–rings with vaseline to make them easier to fit.

Check that the correct connector is connected to the correct injector. The wiring is marked.

Checking flow capacity of injectors, 4 Cyl

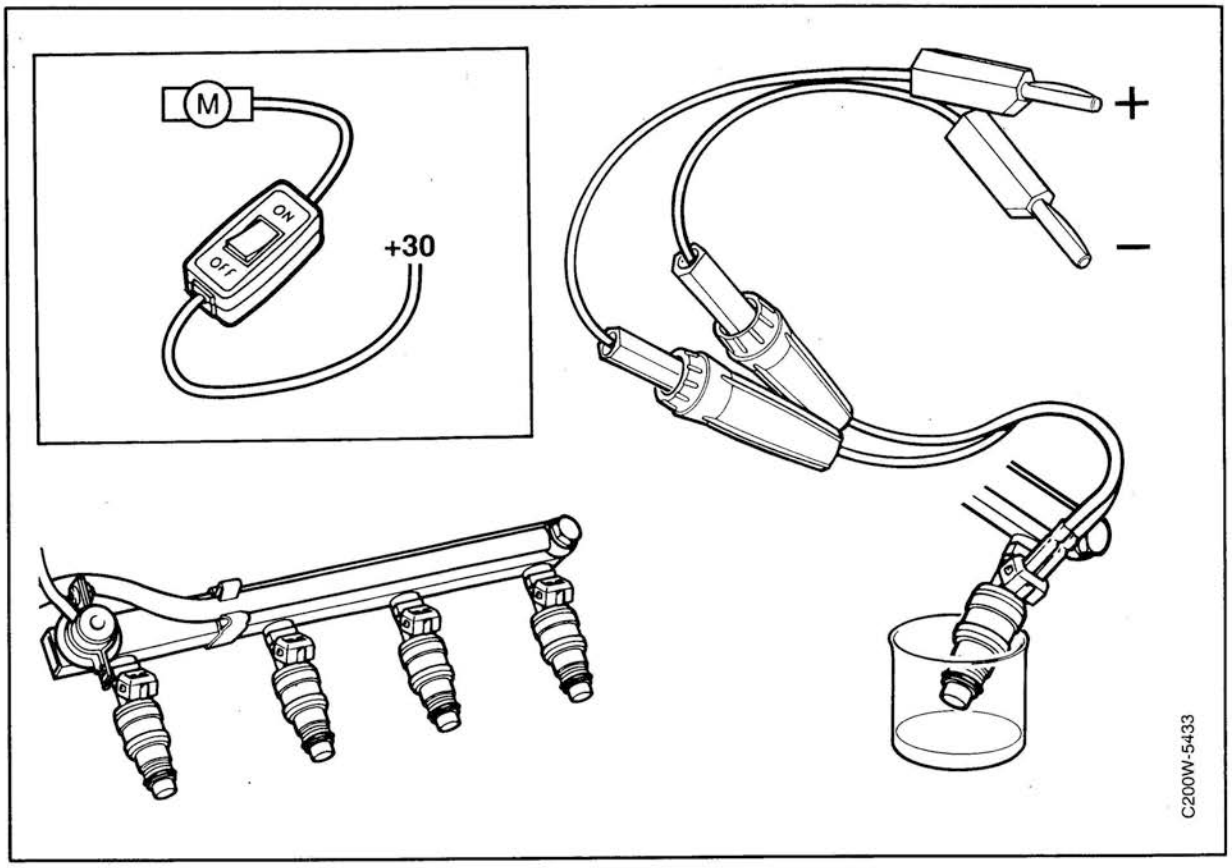

⚠ WARNING

Ensure good ventilation. If approved ventilation for extraction of fuel fumes is available, this should be used.

Wear protective gloves. Long–term contact with fuel can cause skin irritation.

Keep a class BE fire extinguisher nearby. Be careful of the danger of sparking, e.g.from circuit breaking, short circuiting etc.

No smoking.

Important

When working on the fuel rail and injectors, take great care to keep everything clean.
Wash around the valves, fuel rail and intake manifold and blow clean with compressed air.

1 Remove fuel rail complete with injectors, see page 68 (aspirating engine) or page 71 (turbo) depending on engine version.

2 Start the fuel pump by connecting LH diagnostic cable 83 93 886 between +30 and the positive side of the fuse to the fuel pump so that there is voltage to the pump.
Check that the injectors do not leak.

3 Place the injectors in turn over a beaker and connect the injector to battery positive voltage using wiring 86 11 410 and 86 11 345.
Activate the injector for exactly 30 seconds and then check that the quantity of fuel in the measuring beaker corresponds to technical data.

4 Change or clean any faulty injectors.

5 Fit fuel rail and injectors. Be careful to connect the correct connector to the correct injector.

Fuel rail with injectors V6 M1995–

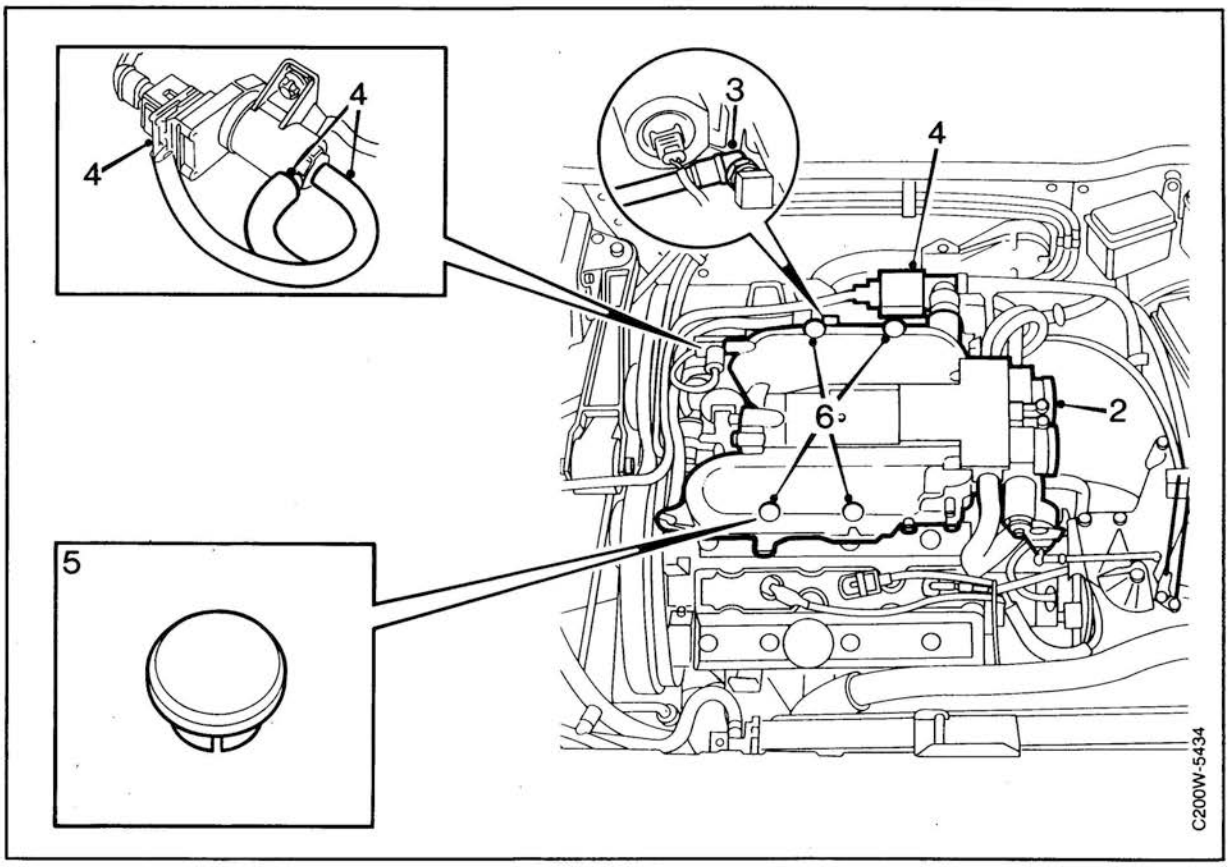

⚠ WARNING

Ensure good ventilation. If approved ventilation for removal of fuel fumes is available, this should be used.

Wear protective gloves. Long–term contact with fuel can cause skin irritation.

Keep a class BE fire extinguisher nearby. Be careful of the danger of sparking, e.g.from circuit breaking, short circuiting etc.

No smoking.

Important

When working on the fuel rail and injectors, take great care to keep everything clean.
Wash around the valves, fuel rail and intake manifold and blow clean with compressed air.

Removal

1 Remove air intake pipe and resonator.

2 Detach the throttle housing and remove the three hoses. Note the position of the two narrow hose in relation to each other.

3 Detach the cable conduit on the rear edge of the intake manifold and disconnect the vacuum hose to the brake servo.

4 Disconnect the electrical connector and hose from the idle air control valve. Remove the vacuum hose and electrical connector to the inner VIM butterfly control valve.

5 Remove the four covers over the intake manifold bolts.

6 Remove the four intake manifold bolts.

Fuel rail with injectors V6 M1995– (contd.)

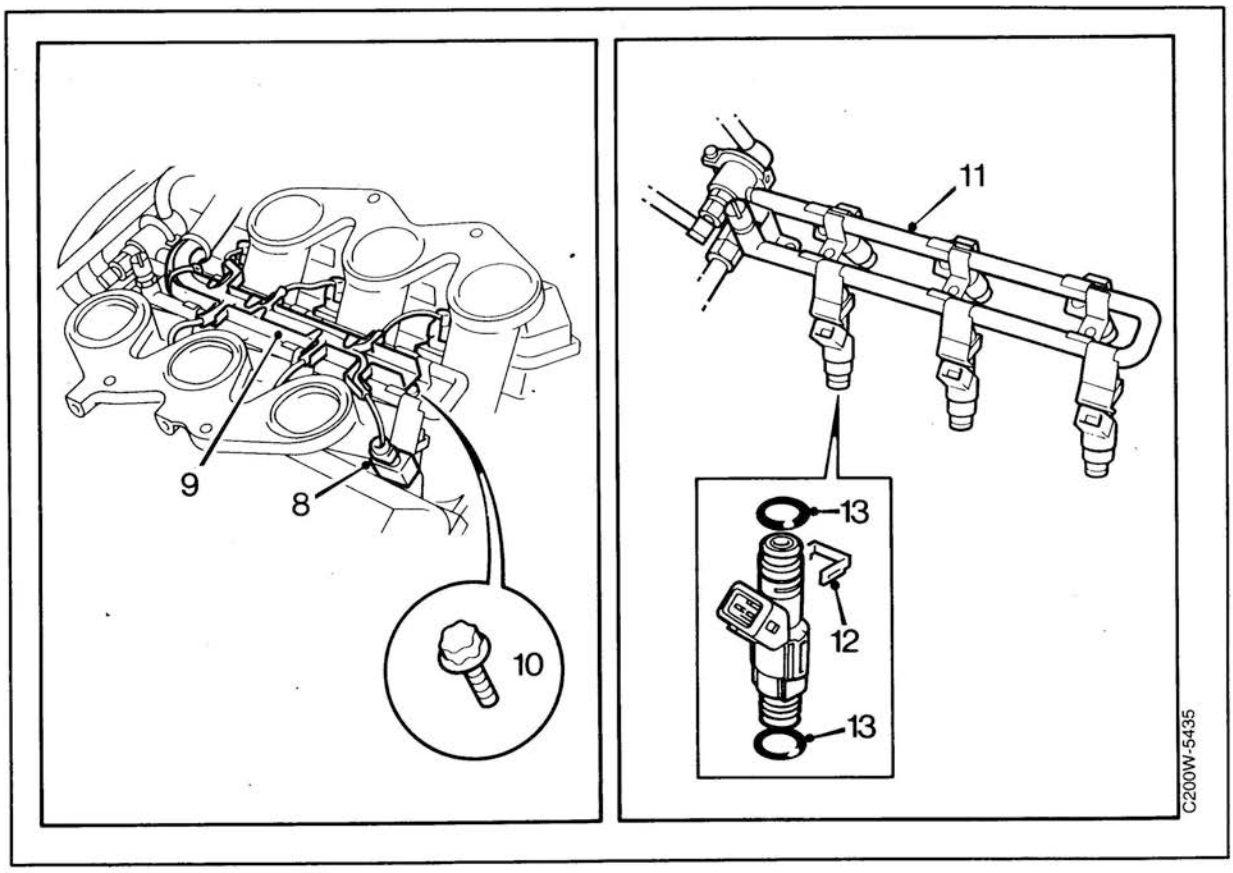

7 Remove the intake manifold. Seal the manifolds with paper or a rag so that nothing can fall into the cylinders.

8 Unplug the electrical connectors from the injectors.

9 Remove the cable conduit from the fuel rail.

10 Remove the screws securing the fuel rail.

11 Carefully lift the fuel rail complete with injectors.

Make sure that there is paper or the like to hand in order to mop up fuel from the fuel rail or injectors.

12 Remove the retaining clip securing the injector(s) that are to be changed/checked.

13 Check the condition of the O–rings.

Fuel rail with injectors V6 M1995– (contd.)

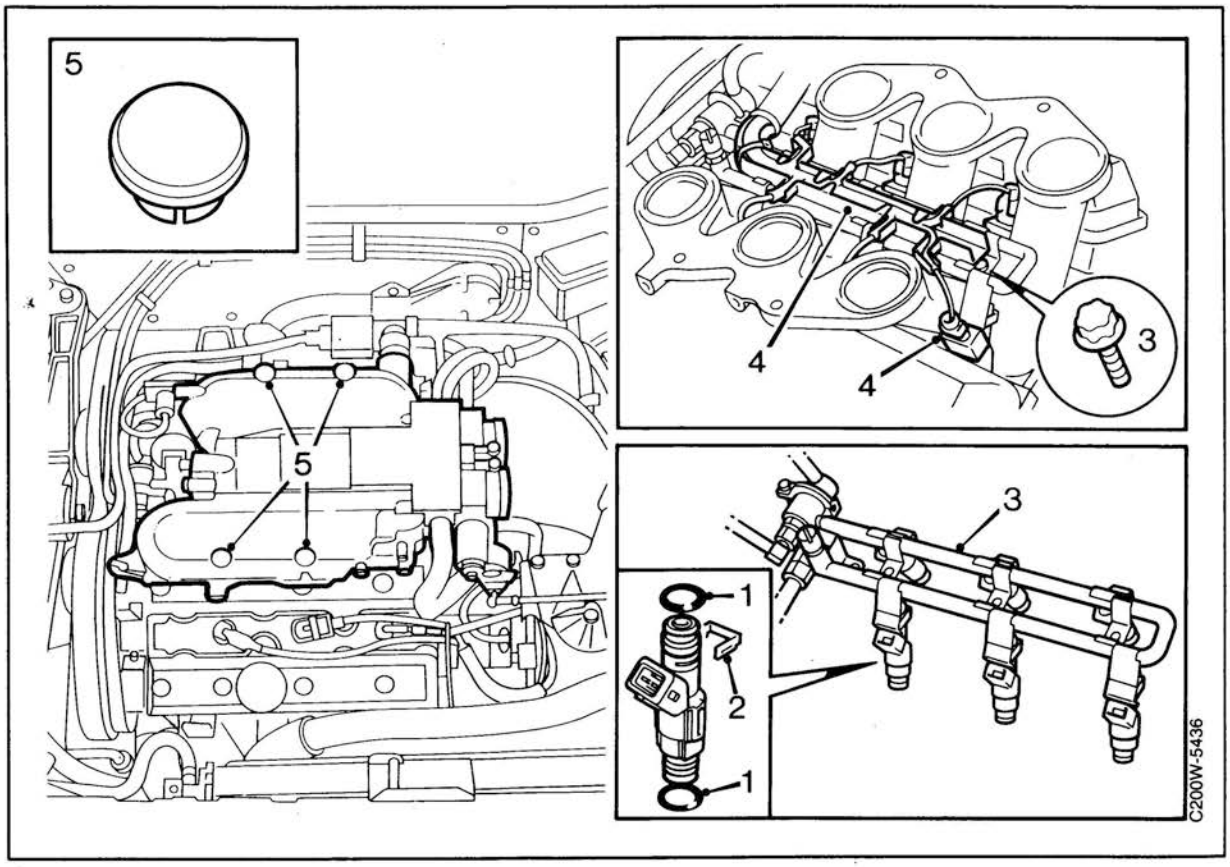

Fitting

1 Check the O–rings at both ends of the injector. Apply a little vaseline to make them easier to fit.

2 Fit the injector(s) to the fuel rail and attach the securing clip.

3 Fit and do up the fuel rail.

4 Connect the injector connectors and fit the cable conduit.

5 If necessary, clean the intake manifold parting line and check the condition of the sealing faces and the O–rings. Lubricate the O–rings with a little vaseline. Remove the plug from the intake manifold and fit the intake manifold. Fit the four covers.

Tightening torque 20 Nm (14 lbf ft)

Fuel rail with injectors V6 M1995 (contd.)

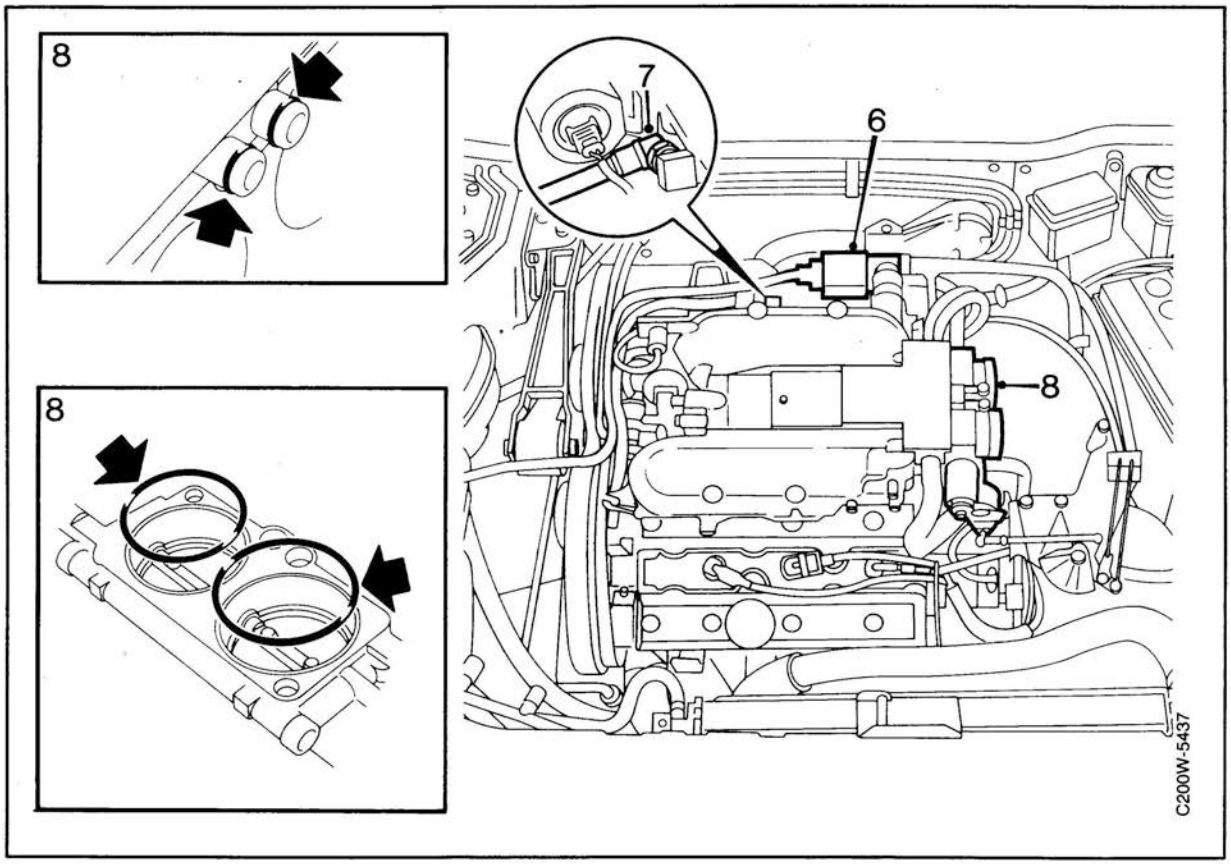

6 Fit the idle air control valve electrical connection and its hose as well as the vacuum hose to the VIM butterfly and the electrical connection to the control valve.

7 Fit the cable conduit to the rear edge of the intake manifold and the vacuum hose to the brake servo.

8 Check the sealing surfaces on the butterfly and the condition of the O–rings. Lubricate the O–rings with a little vaseline.
Fit the throttle and the three hoses.

Tightening torque 8 NM (6 lbf ft)

Important

It is important that the two narrow hoses are connected to the correct nipple.
The hose from the Tee pipe (vacuum tank and EVAP canister purge valve) should be connected to the outer nipple (nearest the left–hand wheel housing).

9 Fit the air intake pipe and resonator.

Important

After fitting, check/ adjust the kick–down cable, see the manual for the particular engine management system.

Checking flow capacity of injectors V6 M1995–

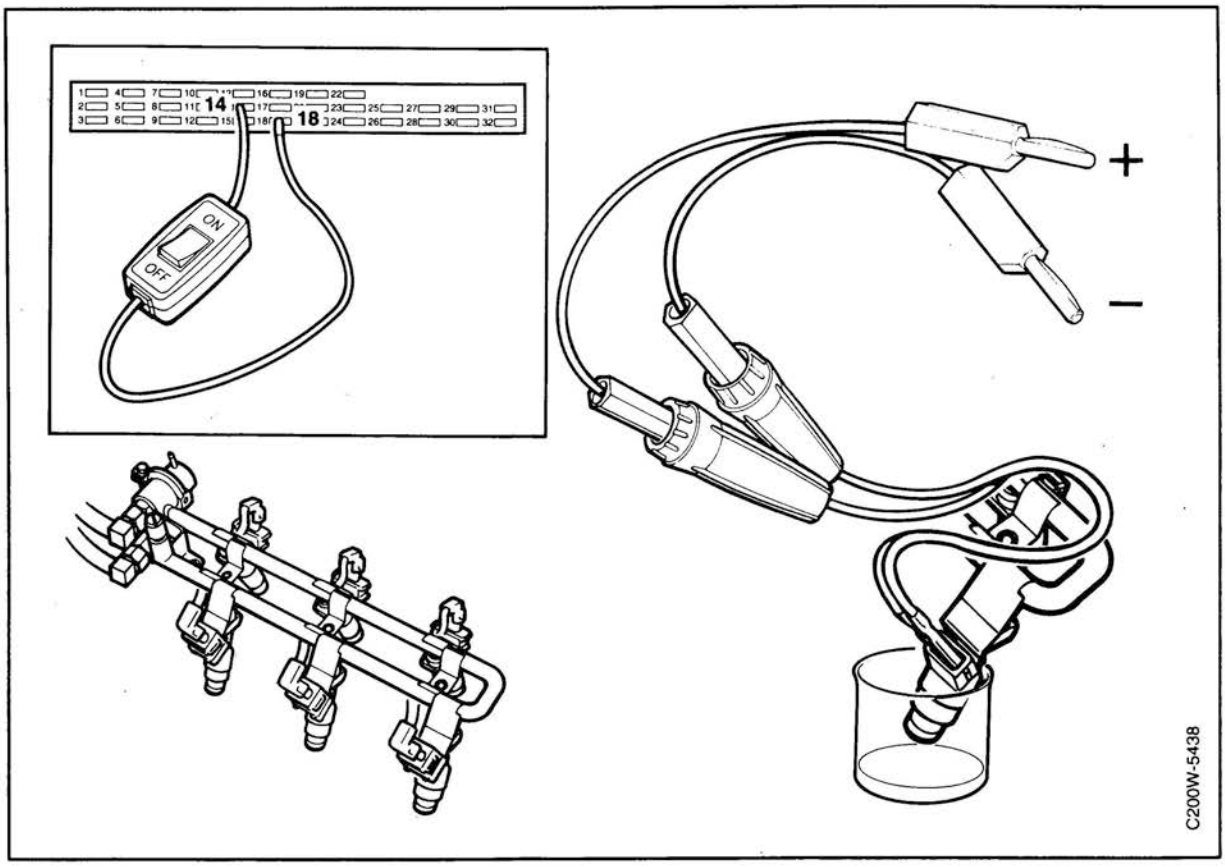

⚠ WARNING

Ensure good ventilation. If approved ventilation for removal of fuel fumes is available, this should be used.

Wear protective gloves. Long–term contact with fuel can cause skin irritation.

Keep a class BE fire extinguisher nearby. Be careful of the danger of sparking, e.g.from circuit breaking, short circuiting etc.

No smoking.

Important

When working on the fuel rail and injectors, take great care to keep everything clean.
Wash around the valves, fuel rail and intake manifold and blow clean with compressed air.

1 Remove the fuel rail complete with injectors as described on the previous pages.

2 Start the fuel pump by jumping between fuses 14 and 18 using special tool 83 93 886.
Check that the injectors do not leak.

3 Place the injectors in turn over a beaker and connect the injector to be checked to battery positive voltage using wiring 86 11 410 and 86 11 345.
Activate the injector for exactly 30 seconds and then check that the quantity of fuel in the measuring beaker corresponds to technical data.

4 Change any faulty injectors.

5 Fit fuel rail and injectors. Be careful to connect the correct connector to the correct injector.

Checking fuel pressure regulator 4 Cyl M1994–

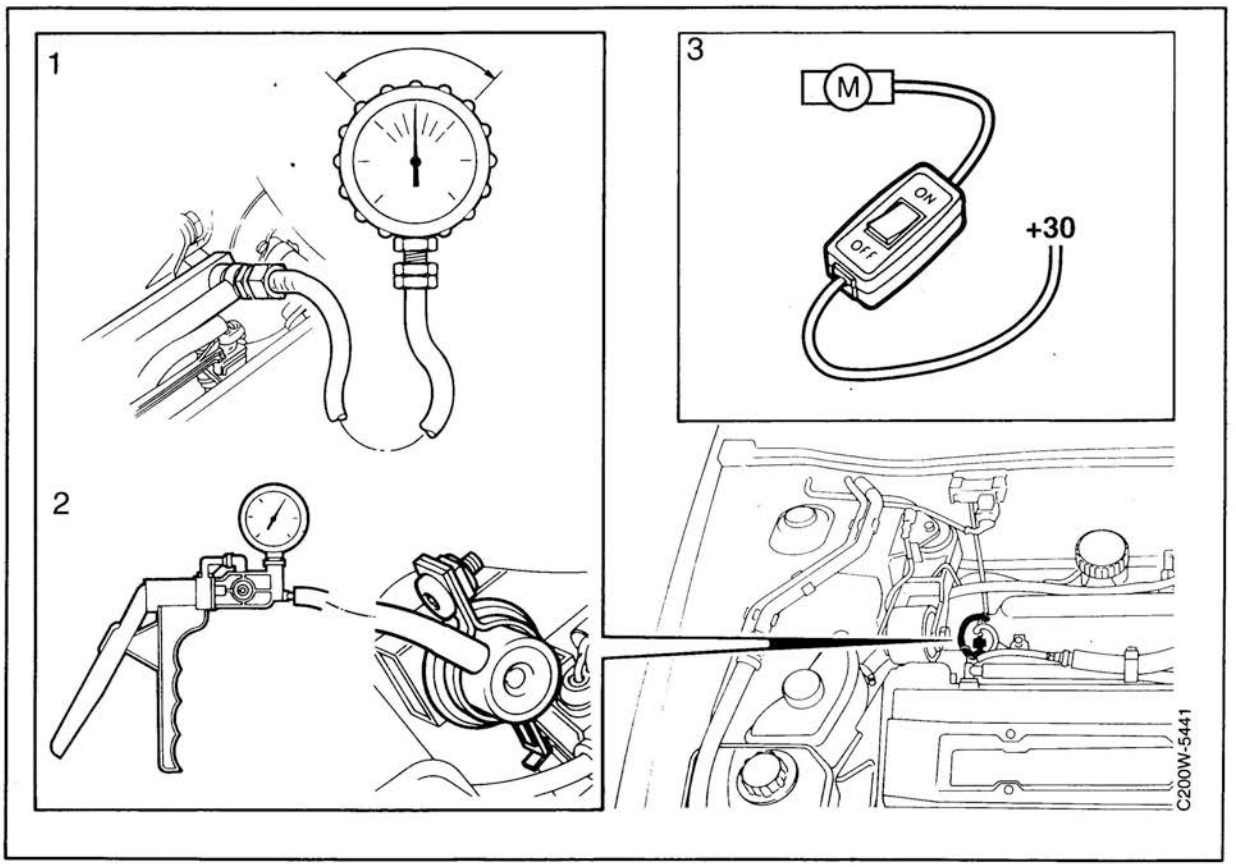

1 Connect pressure measuring equipment, special tool 83 93 852 to the pressure side of the fuel rail.

2 Disconnect the vacuum hose from the pressure regulator and connect the vacuum pump.

3 Start the fuel pump by connecting LH diagnostics cable 83 93 886 between +30 and the positive side of the fuse to the fuel pump so that there is voltage to the pump.

4 Check the reading at barometric pressure. See information under technical data.

5 Increase the vacuum in the pressure regulator using the vacuum pump, special tool (45) 30 14 883. The system pressure should now drop by as much as the reading on the pressure gauge, see "Technical data" for actual values.

The following applies to turbo engines:

6 Pump up pressure in the pressure regulator using the vacuum pump. The system pressure should now increase as much as the reading on the pressure gauge, see "Technical data" for actual values.

Changing the fuel pressure regulator 2.3i and 2.0i M1994–

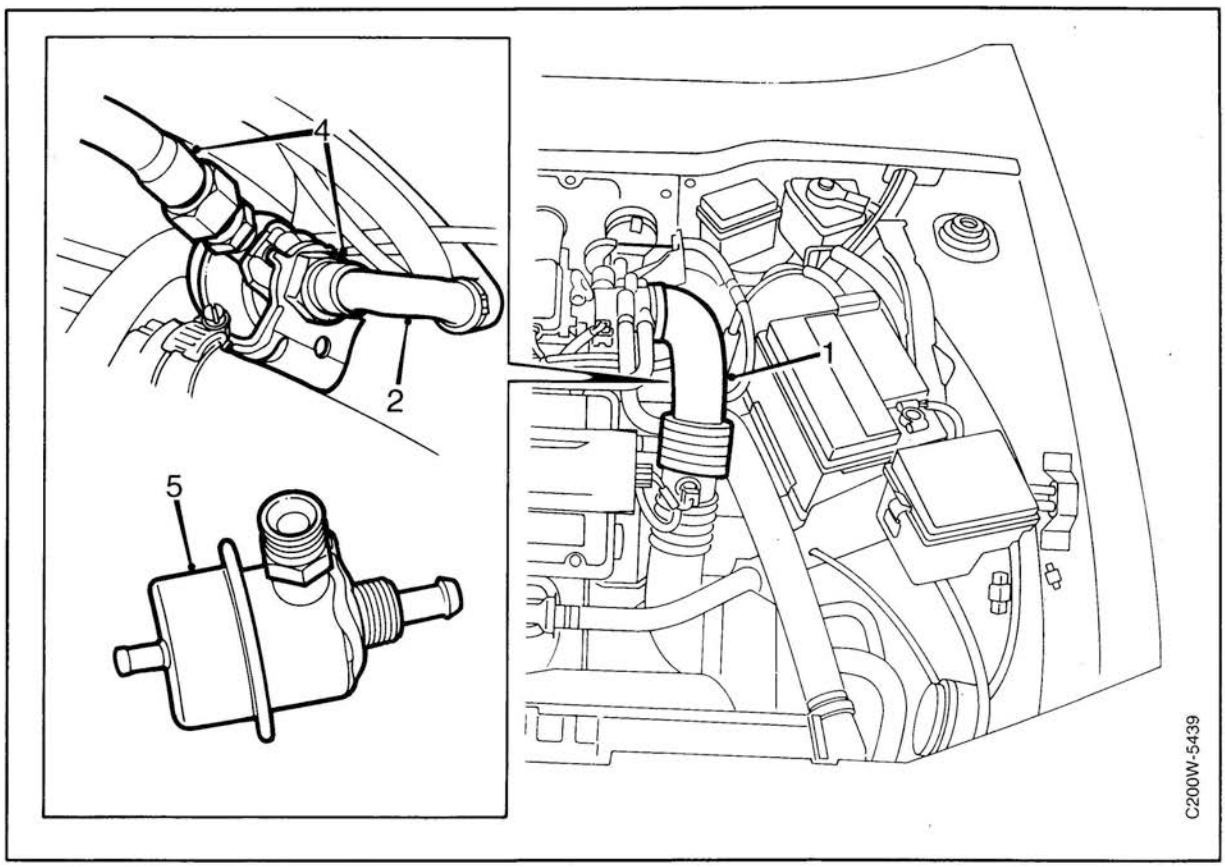

⚠ WARNING

Ensure good ventilation. If approved ventilation for removal of fuel fumes is available, this should be used.

Wear protective gloves. Long–term contact with fuel can cause skin irritation.

Keep a class BE fire extinguisher nearby. Be careful of the danger of sparking, e.g.from circuit breaking, short circuiting etc.

No smoking.

Important

When working on the fuel rail and injectors, take great care to keep everything clean.
Wash around the valves, fuel rail and intake manifold and blow clean with compressed air.

Removal

1 Disconnect the plastic pipe from the throttle body.

2 Clean the fuel hoses and disconnect the return hose.

3 Disconnect the vacuum hose.

4 Disconnect the hose between the pressure regulator and the fuel rail and remove the securing nut.

5 Remove the regulator.

Fitting

Check the O–rings and change if necessary. Lubricate the O–rings with a little vaseline and fit the regulator.

Fitting is in reverse order.

Changing the fuel pressure regulator 2.3T and 2.0T M1994–

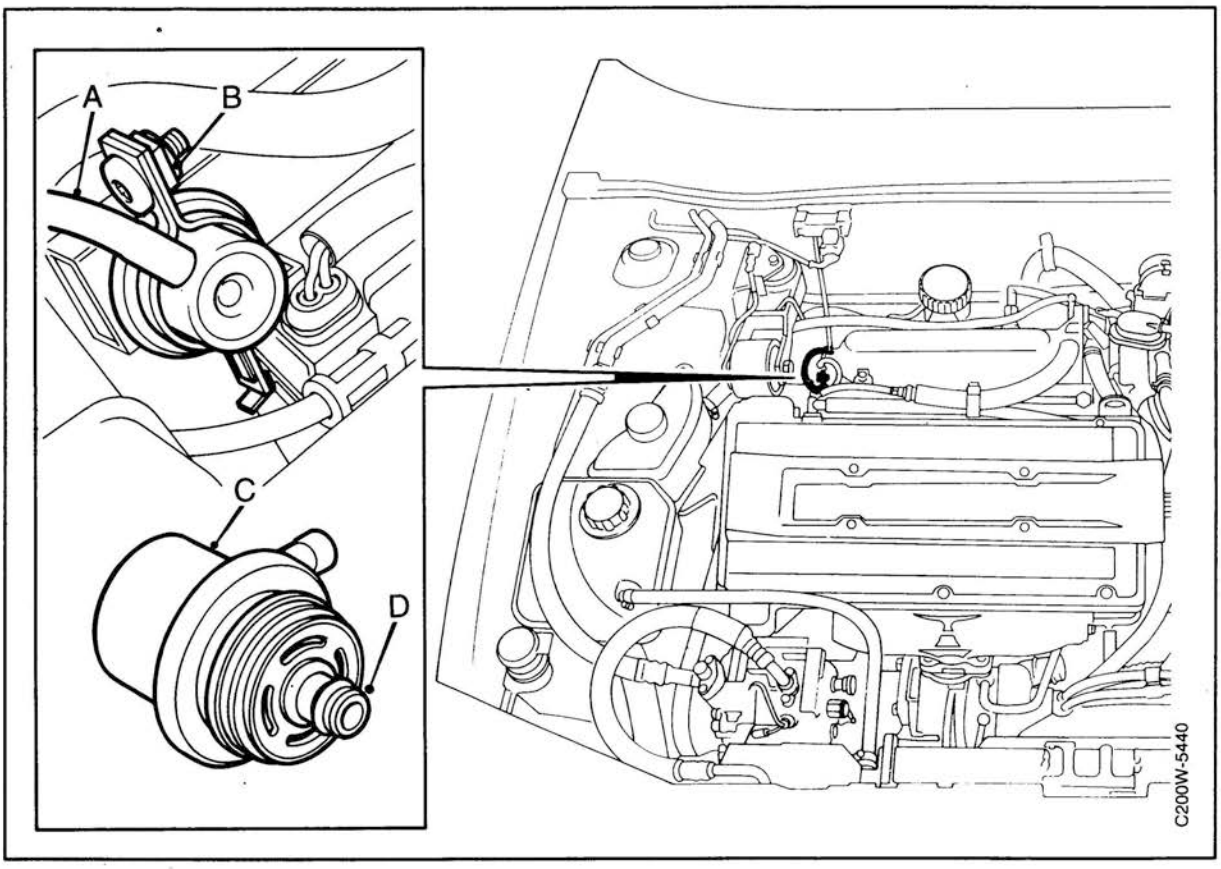

⚠ WARNING

Ensure good ventilation. If approved ventilation for removal of fuel fumes is available, this should be used.

Wear protective gloves. Long–term contact with fuel can cause skin irritation.

Keep a class BE fire extinguisher nearby. Be careful of the danger of sparking, e.g.from circuit breaking, short circuiting etc.

No smoking.

Important

When working on the fuel rail and injectors, take great care to keep everything clean.
Wash around the valves, fuel rail and intake manifold and blow clean with compressed air.

Removal

1 Start by cleaning around the regulator and then disconnect the vacuum hose (A). Disconnect the plastic pipe from the throttle body.

2 Remove the securing clip (B).

3 Remove the regulator using a screwdriver (C).

Fitting

1 Check the O–rings and change them if necessary. Lubricate the O–rings with a little vaseline and fit the regulator (D).

2 Fit the securing clip (B).

3 Connect the vacuum hose (A).

4 Check operation and check for leaks.

Checking the fuel pressure regulator V6 M1995–

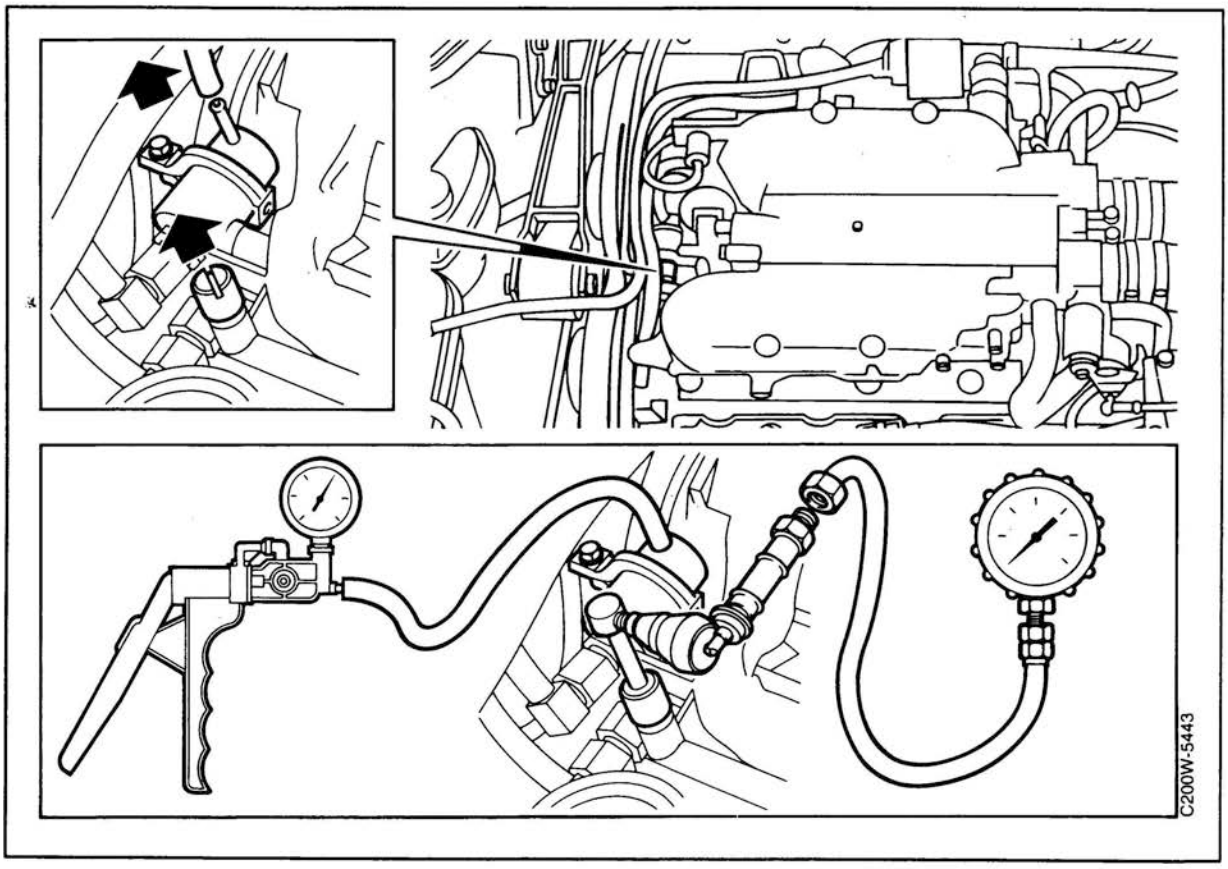

1 Connect pressure measuring equipment, special tool 83 93 852 and adaptor 83 95 121 to the pressure side of the fuel rail.

2 Disconnect the vacuum hose from the pressure regulator and connect the vacuum pump.

3 Start the fuel pump by jumping between fuses 14 and 18 using special tool 83 93 886.

4 Check the reading a barometric pressure. The reading should be 3.0 bar (43.5 psi).

5 Increase the vacuum in the pressure regulator using vacuum pump, special tool (45) 30 14 883. The system pressure should now drop as much as the reading on the gauge, see "Technical data" for actual readings.

Changing the fuel pressure regulator V6 M1995–

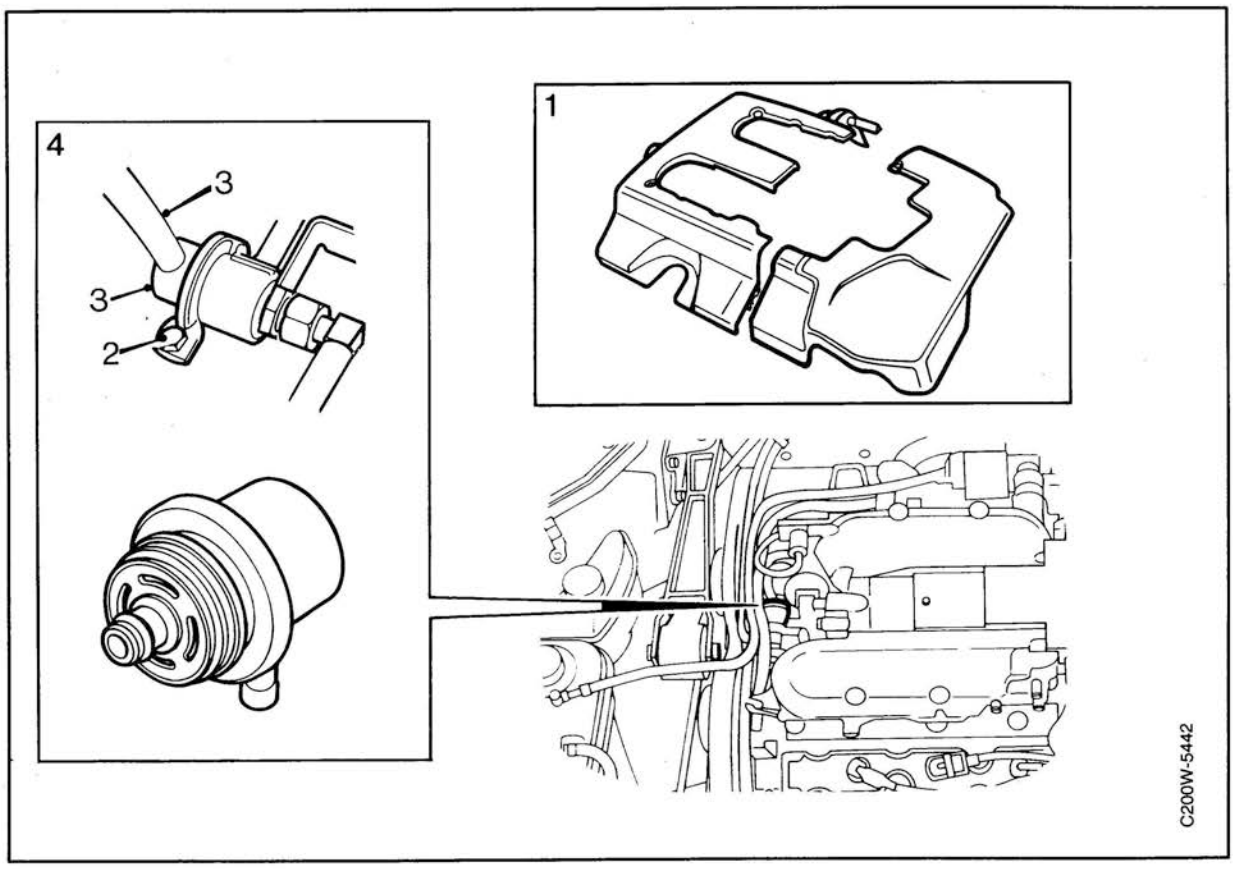

⚠ WARNING

Ensure good ventilation. If approved ventilation for removal of fuel fumes is available, this should be used.

Wear protective gloves. Long–term contact with fuel can cause skin irritation.

Keep a class BE fire extinguisher nearby. Be careful of the danger of sparking, e.g.from circuit breaking, short circuiting etc.

No smoking.

Important

When working on the fuel rail and injectors, take great care to keep everything clean.
Wash around the valves, fuel rail and intake manifold and blow clean with compressed air.

Removal

1 Remove the engine covers.

2 Make sure that there is paper or the like at hand in order to mop up fuel from the fuel pressure regulator.

3 Undo the screw and open the clip.

4 Disconnect the vacuum hose.

5 Remove the pressure regulator.

Fitting

Fitting is in reverse order.

Lubricate the O–ring with a little vaseline before fitting.

Checking residual pressure

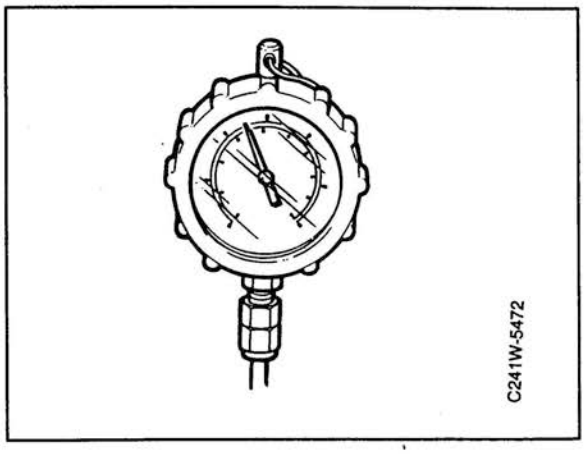

1 Connect the pressure measuring equipment to the fuel rail.

2 Start the fuel pump by connecting LH diagnostics cable 83 93 886 between +30 and the positive side of the fuse to the fuel pump so that there is voltage to the pump.

3 Switch off the pump and wait for 20 minutes to test residual pressure. See technical data for correct pressure.

If the pressure drops, this can be due to the following:
1. Pressure regulator.
2. Non–return valve in pump.
3. Leakage in fuel line.
4. Leakage in injectors.

Quick diagnosis:

1 Check the fuel lines for external leakage.

2 Start the pump and run up the pressure before switching it off again.

3 Remove the return line from the pressure regulator. If fuel runs out of the pressure regulator, it is faulty and should be changed.

4 If there is nothing wrong with the pressure regulator and the pressure falls quickly, the leak is probably in the non–return valve. Change it and test.

5 If the pressure falls slowly, the leak is probably in an injector. Remove and check.

Pulsator

Noise from the pulsator can arise in cars with B234 engines from M1990 to M1992.

Due to its design, the pulsator fitted in the cars affected was insufficient to damp the pressure pulses caused in the fuel system by the injectors. There are two designs of a later pulsator that is better able to cope with damping and variation in fuel quality:

1 with screw connection to be used as service measure in cars with pulsation noise in passenger cabin when idling.

2 with ribbed connector for fitting in production (introduced during M1992).

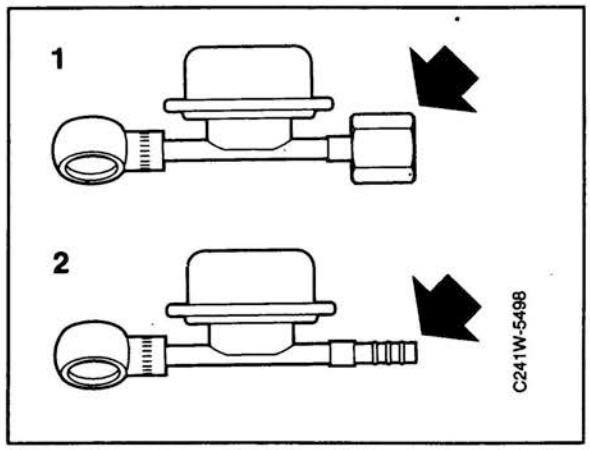

Important

When changing a pulsator of new design fitted during production (with ribbed connector), the fuel line must be cut and an adaptor fitted before the new service pulsator is fitted. For changing pulsator, see next page.

In cases where the above action does not help, an extra pulsator can be fitted in the return line of the fuel system on B234 engines. This can also be done for cars with B202 engines which have the same problem. For fitting extra pulsator, see page 86.

Changing the pulsator

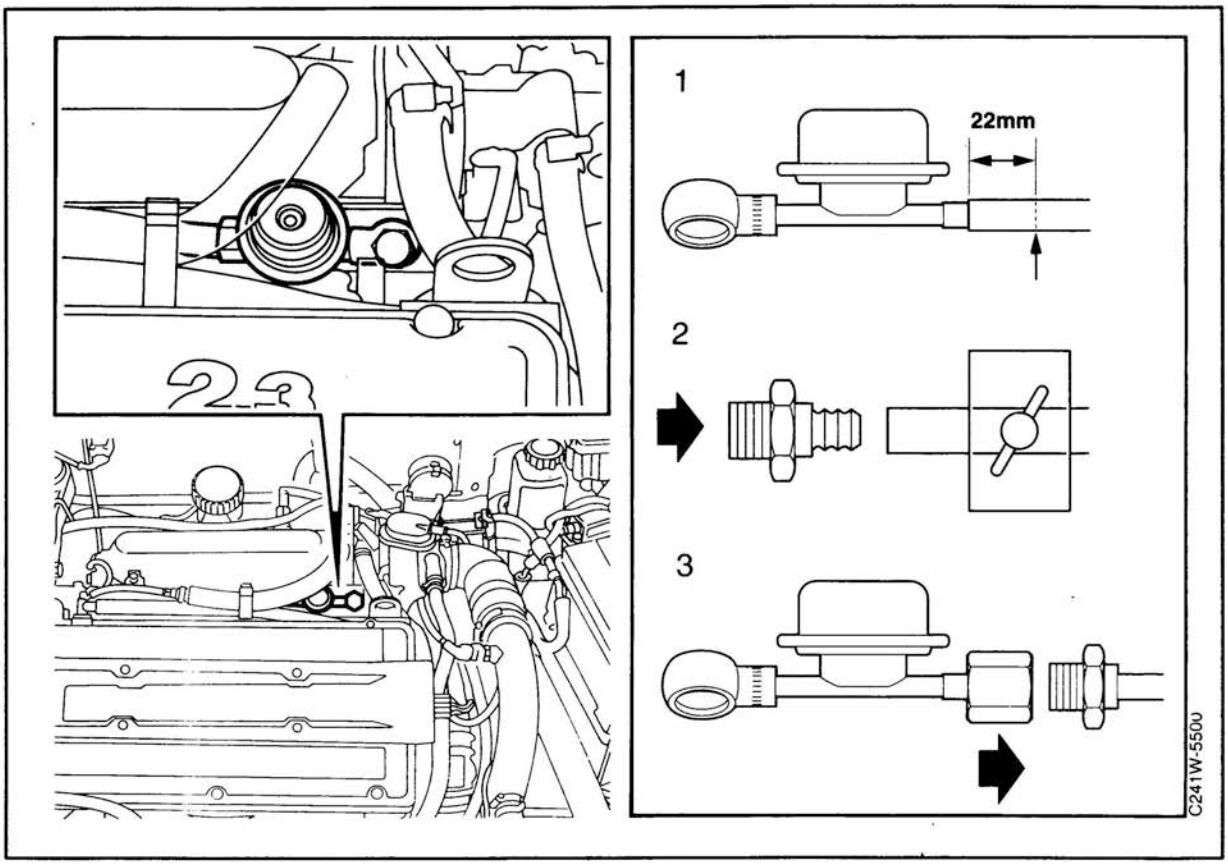

⚠ WARNING

Ensure good ventilation. If approved ventilation for removal of fuel fumes is available, this should be used.

Wear protective gloves. Long–term contact with fuel can cause skin irritation.

Keep a class BE fire extinguisher nearby. Be careful of the danger of sparking, e.g.from circuit breaking, short circuiting etc.

No smoking.

Important

When working on the fuel rail and injectors, take great care to keep everything clean.
Wash around the valves, fuel rail and intake manifold and blow clean with compressed air.

1 Cut the fuel line about 22 mm from the end.

2 Use tool 83 94 546 to secure the fuel line and fit adaptor 93 68 234.

3 Connect the new service pulsator 41 64 232.

4 Use two new seals 89 81 979 and tighten the fittings.

5 Start the car and check there are no leaks.

Fitting extra pulsator B234L

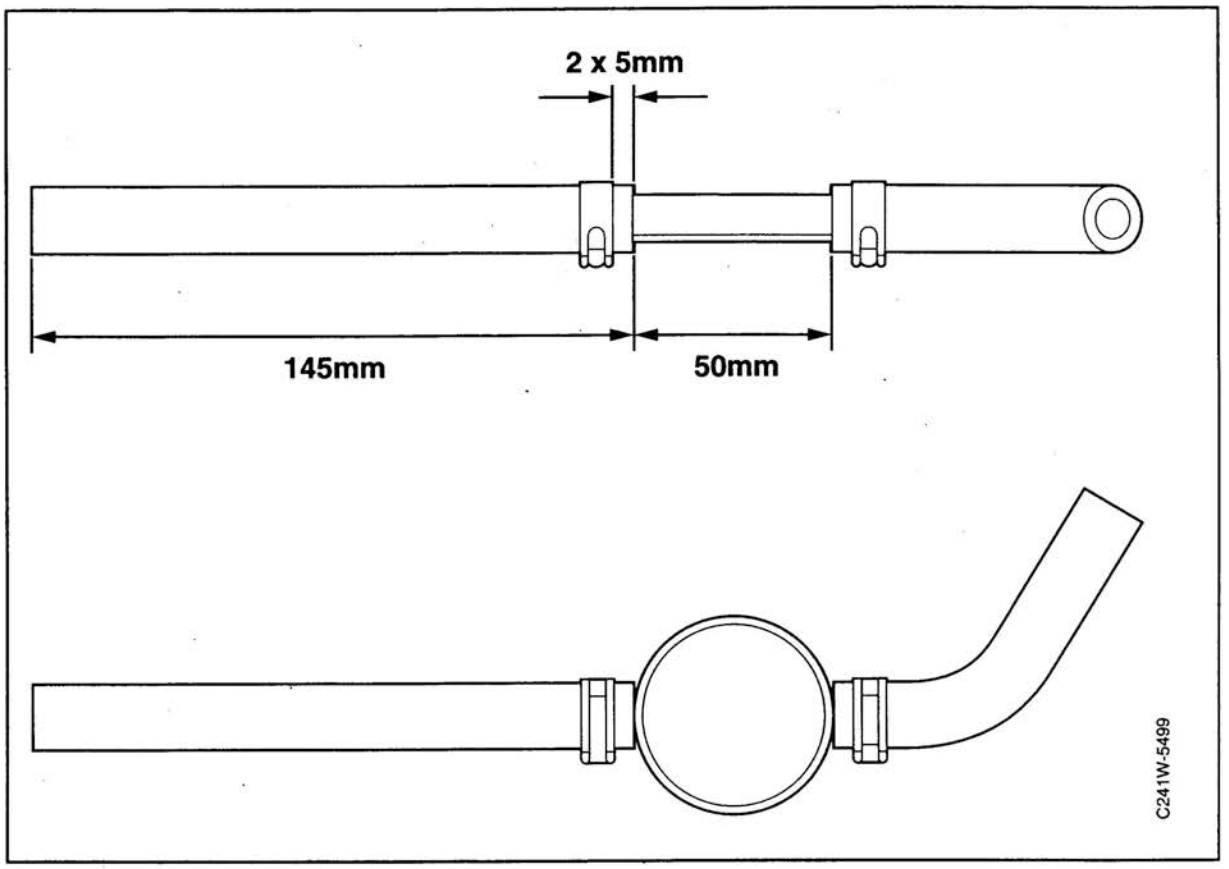

1 Remove the return line at the fuel rail.

2 Cut the rubber hose 145 mm from the joint with the plastic hose as illustrated. Use a sharp knife.

3 Cut 50 mm from the loose rubber hose to accommodate the pulsator.

4 Fit two spring clips to the rubber hose, fit the pulsator and adjust the spring clips to the correct position.

5 Connect the return line to the fuel rail and check that nothing is in contact with the pulsator and line. Use cable ties but watch the position of the spring clips so that they do not rub against adjacent components.

6 Start the engine and check that there is no fuel leakage.

Fitting extra pulsator B234i and B202

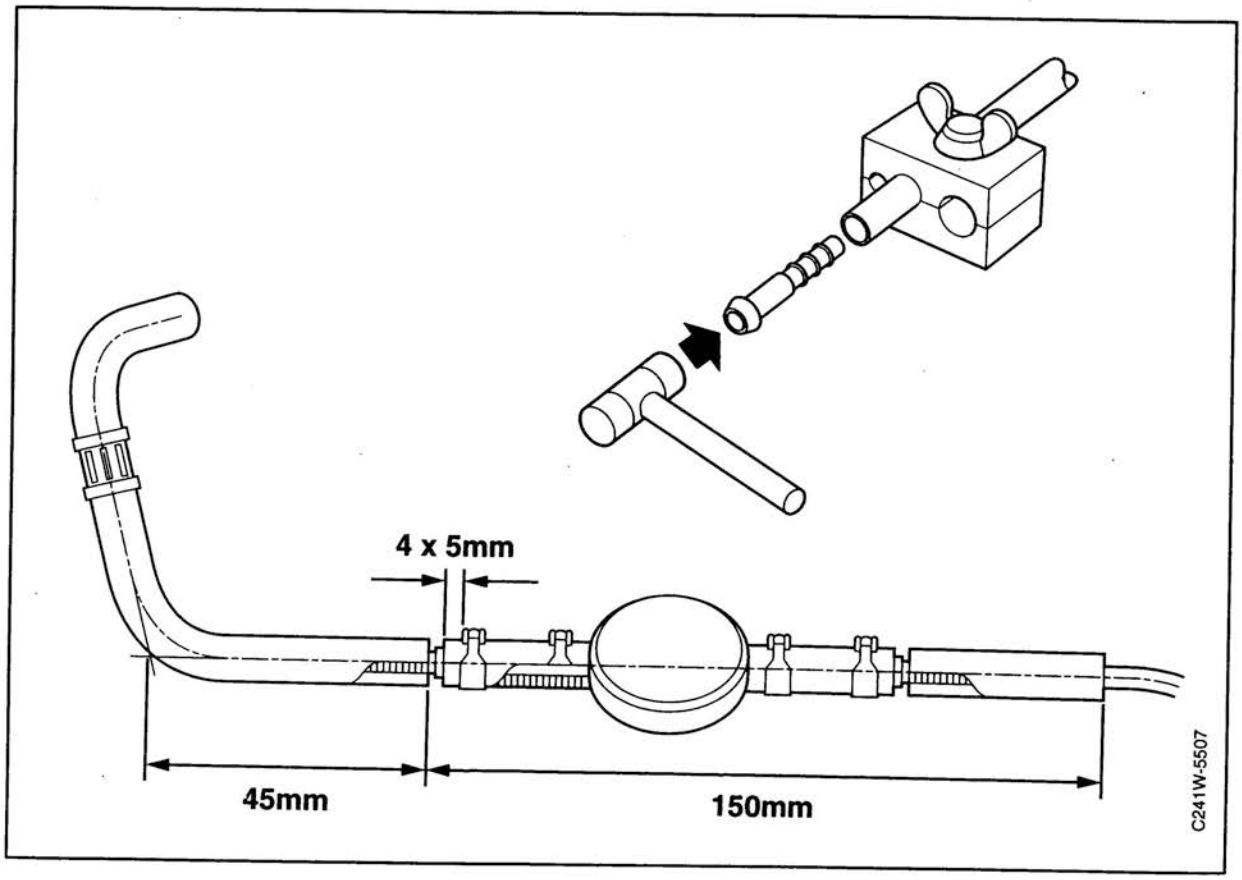

1 Remove the intake hose at the throttle body and disconnect the return line at the pressure regulator.

2 Cut the plastic line about 45 mm from the elbow, as illustrated. Use sharp knife.

3 Cut the line in the car 150 mm to accommodate the pulsator.

4 Fit two connectors in the plastic line. Use special tool 83 94 546.

5 Connect two rubber hoses and fit 4 spring clips as illustrated. Fit the pulsator and adjust the spring clips to the correct position.

6 Connect the return line and check that the pulsator and line are not touching anything. Use cable ties, but be careful of the position of the spring clips so that they do not rub against adjacent components.

7 Fit the intake hose, start the engine and check that there is no fuel leakage.

Workshop Information

User feedback

To

Saab Automobile AB
Workshop Information, MLVI
S-461 80 TROLLHÄTTAN
SWEDEN

Telefax phone no.: +46 520 84370

From

.....

.....

.....

.....

Comments/suggestions

.....

.....

.....

.....

.....

.....

.....

.....

.....

.....

.....

.....

.....

.....

.....

Manual concerned: .....

It is important that Saab technicians in the field regard the Workshop Service Manual as their bible, and we therefore strive to make the manual easy to use and to provide accurate information.

By letting us have your views on this manual you will be helping us to maintain a high standard in our literature.

Note down any comments or suggestions you may have on a sheet of paper or take a copy of this page and send us your views at the above address. For greater convenience, you are also welcome to send your comments by fax, using the telephone number shown.

ENG **Ordering No. 360370.** English edition. Printed in Sweden.

Saab Automobile AB
Trollhättan, Sweden

Printed in Sweden, Graphic Systems AB, Gbg 1994.24534